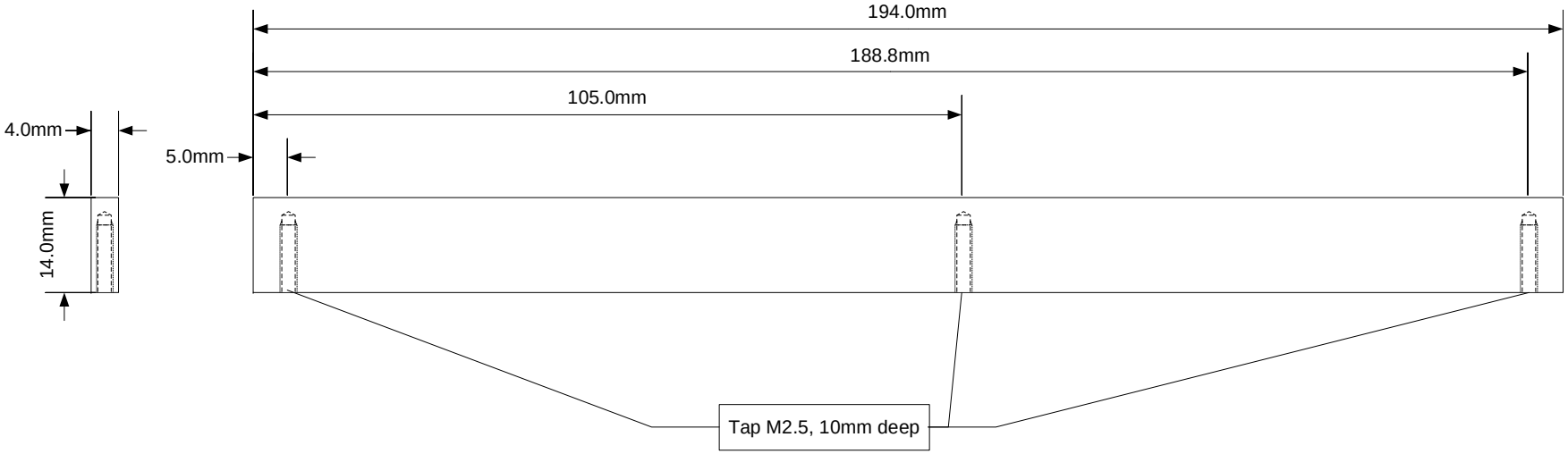

DESCRIPTION	Material: Aluminium Finish: Natural
DRAWN BY	Ivan Church (Rutherford Appleton Laboratory)
TITLE	PC3205 AIR DEFLECTOR