A	2-TE-0070-020-06-A	THIS DRAWING CONFORMS TO B.S. 3939

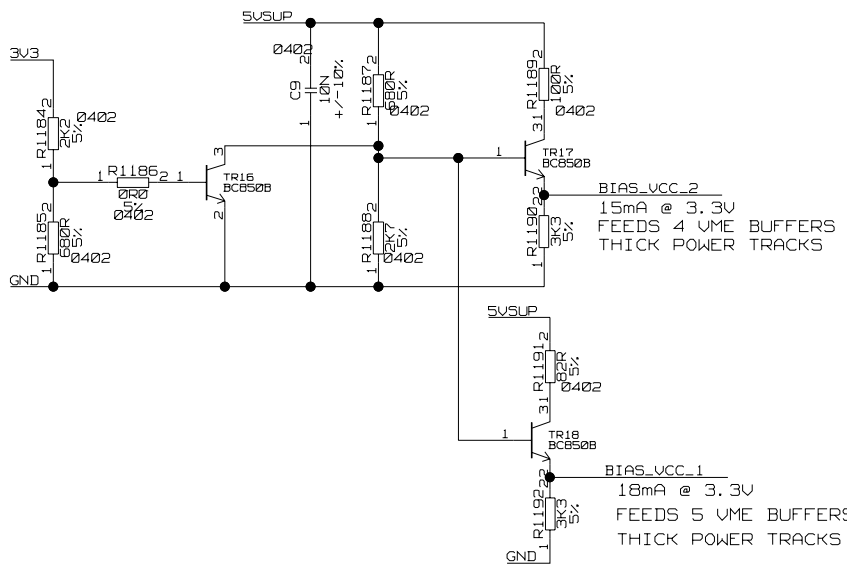

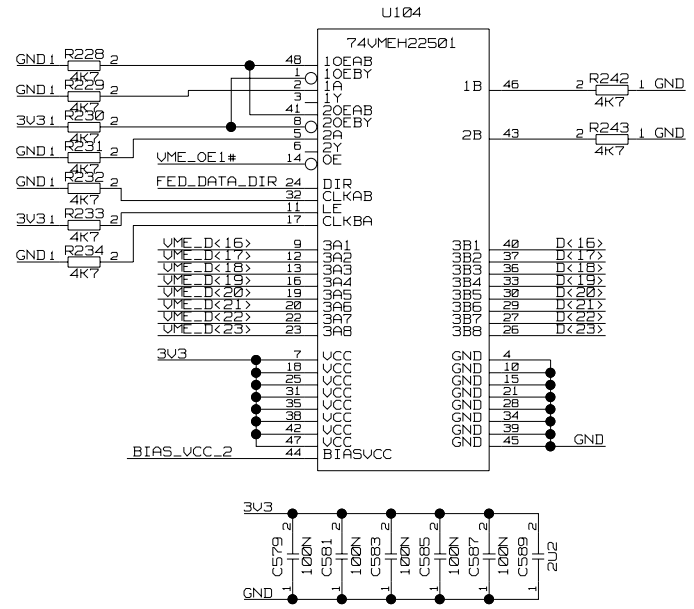

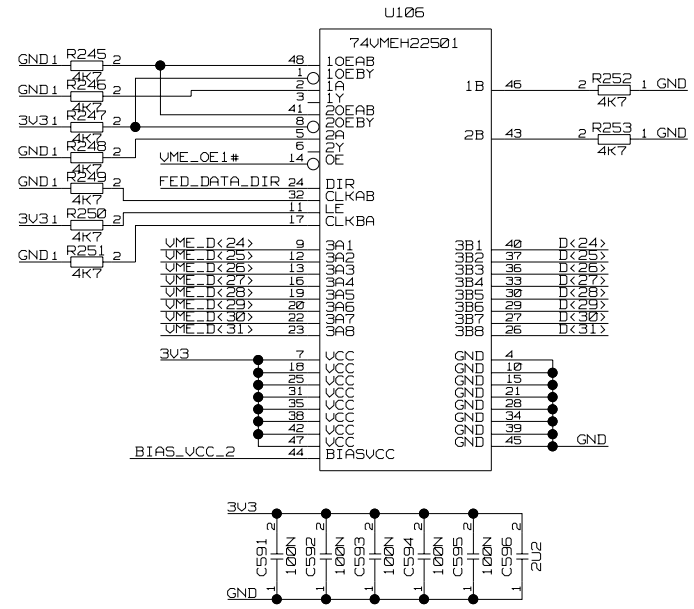

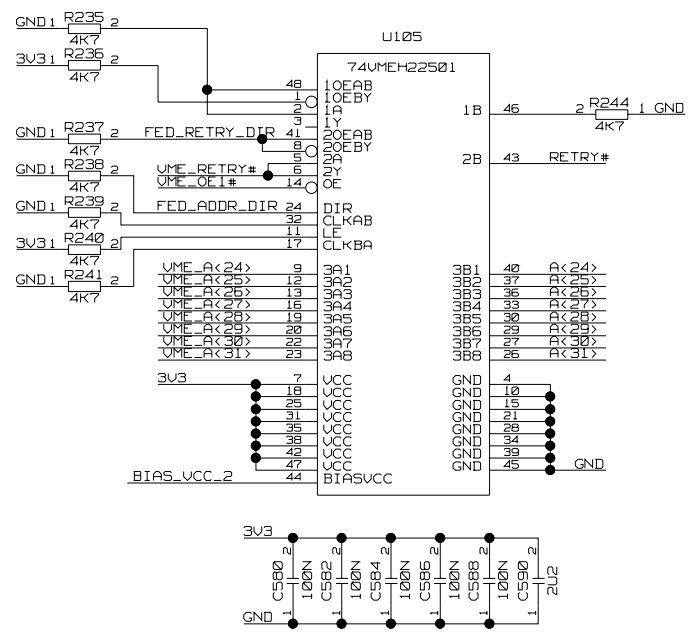

A	13-11-02	-----	S. TAGHAVIRAD	S. TAGHAVIRAD	S. TAGHAVIRAD	
ISSUE	DATE	MOD NO.	DRN BY.	CHKD.	APPD.	STATUS

USED ON CMS

© CCLRC 2002

CCLRC COUNCIL FOR THE CENTRAL LABORATORY OF THE RESEARCH COUNCILS RUTHERFORD APPLETON LABORATORY, CHILTON, OXON OX11 0QX.

TITLE PC3205M CIRCUIT

CMS TRACKER FED v1

J2 VME INTERFACE AND PRECHARGE CIRCUIT

A 2-TE-0070-020-06-A

TOTAL NO. OF SHEETS 95

A 2-TE-0070-020-06-A