A | 2 -TE-0070-020-05-A | THIS DRAWING CONFORMS TO B.S. 3939

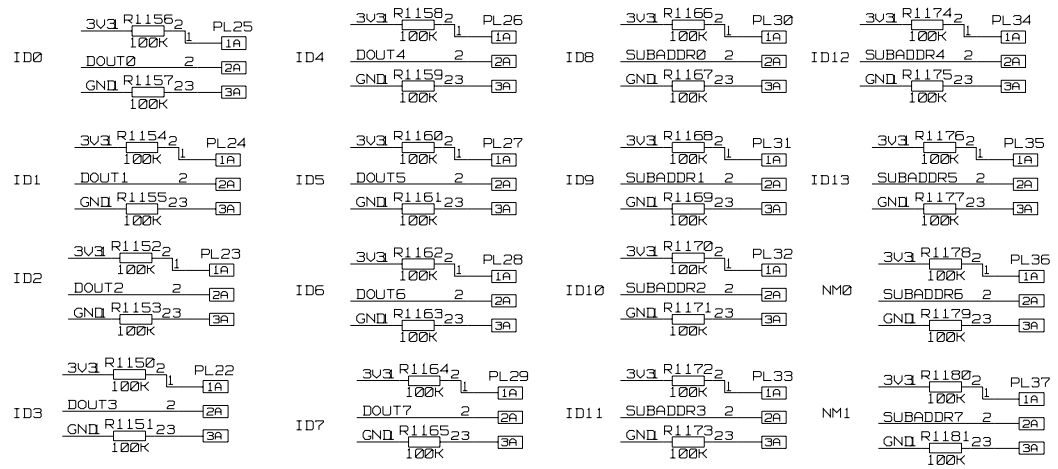

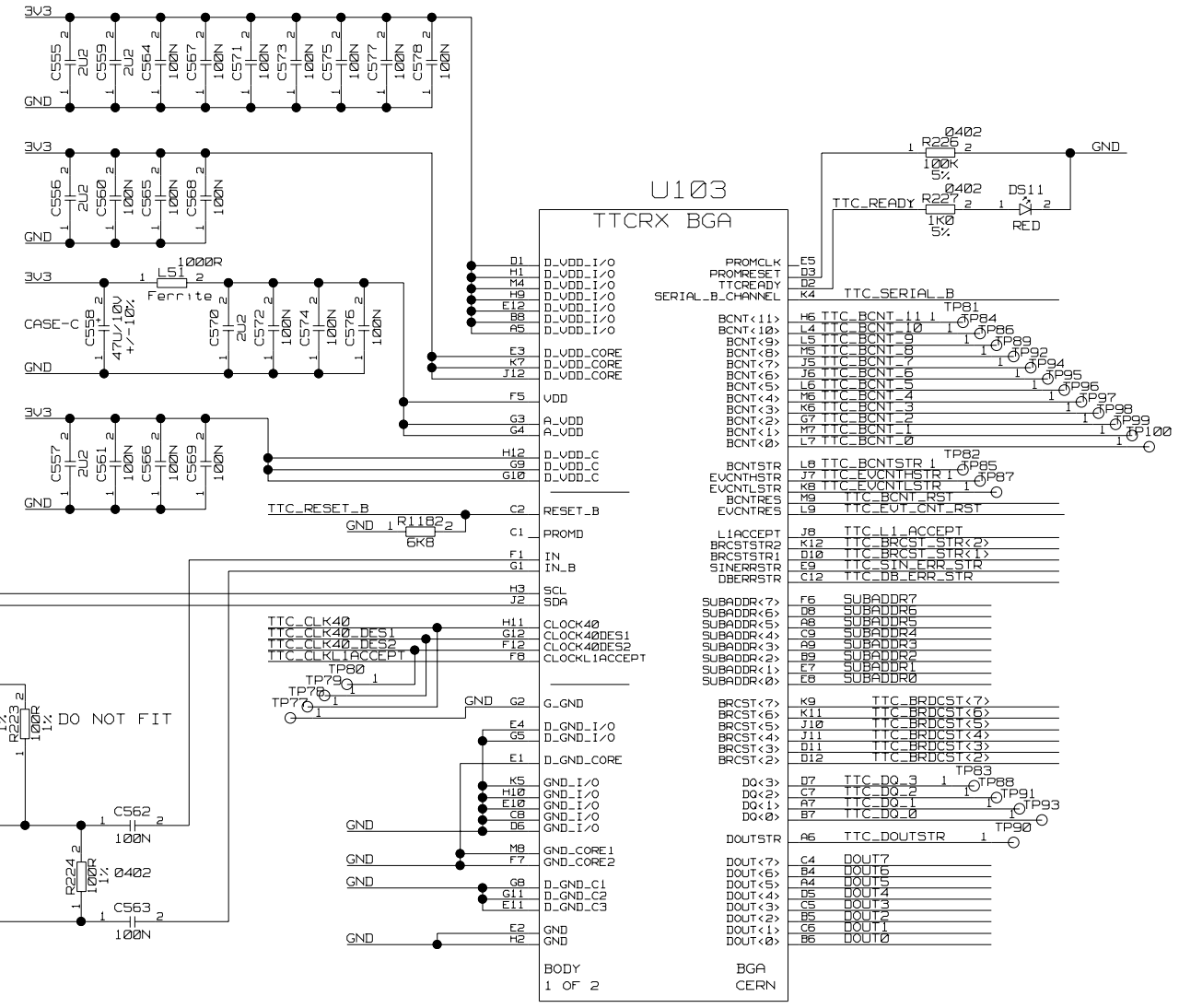

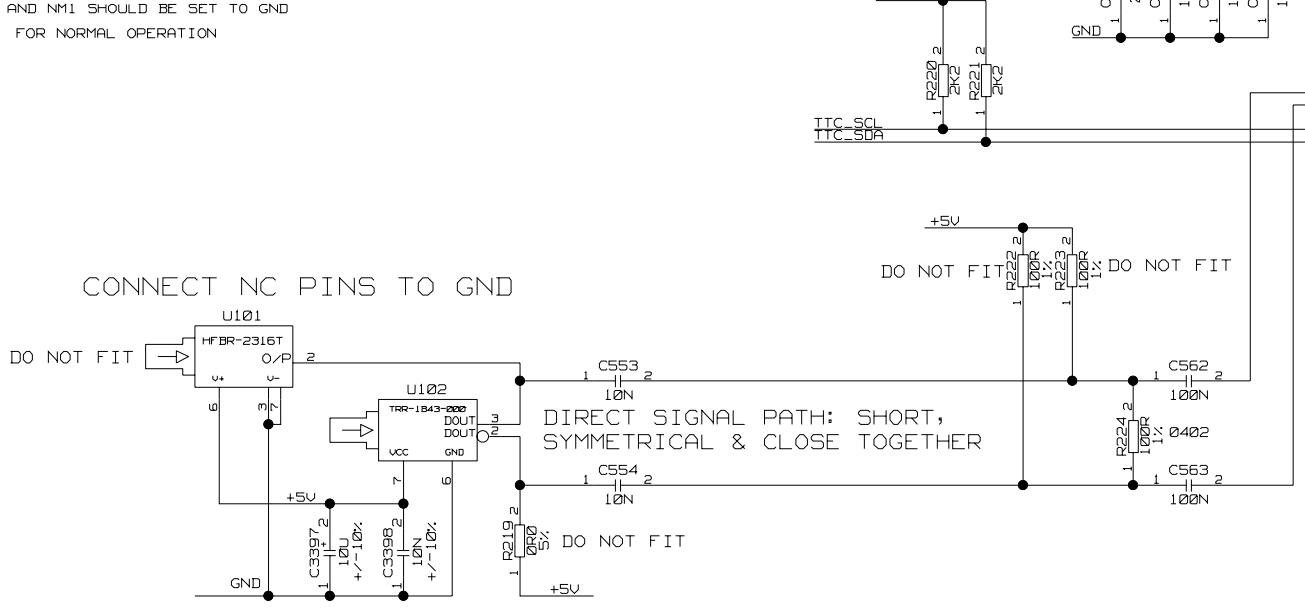

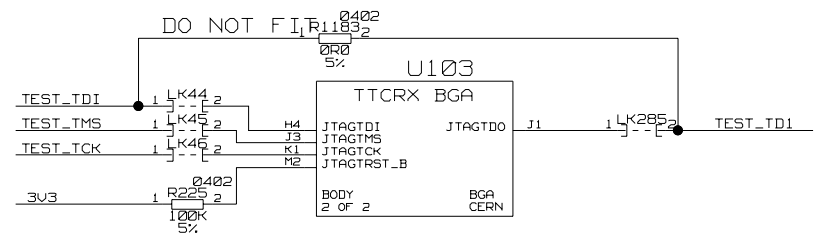

DO NOT FIT SINGLE-ENDED PIN DIODE OPTION

A	13-11-02	-----	S. TAGHAVIRAD	S. TAGHAVIRAD	S. TAGHAVIRAD	
ISSUE	DATE	MOD NO.	DRN BY.	CHKD.	APPD.	STATUS

USED ON CMS

© CCLRC 2002

CCLRC COUNCIL FOR THE CENTRAL LABORATORY OF THE RESEARCH COUNCILS — RUTHERFORD APPLETON LABORATORY, CHILTON, OXON OX11 0QX.

TITLE

PC3205M CIRCUIT

CMS TRACKER FED v1

TTC RECEIVER AND PIN DIODE CONNECTOR

A 2-TE-0070-020-05-A

TOTAL NO. OF SHEETS 95

A 2 -TE-0070-020-05-A