A | 2-TE-0070-020-03-A | THIS DRAWING CONFORMS TO B.S. 3939

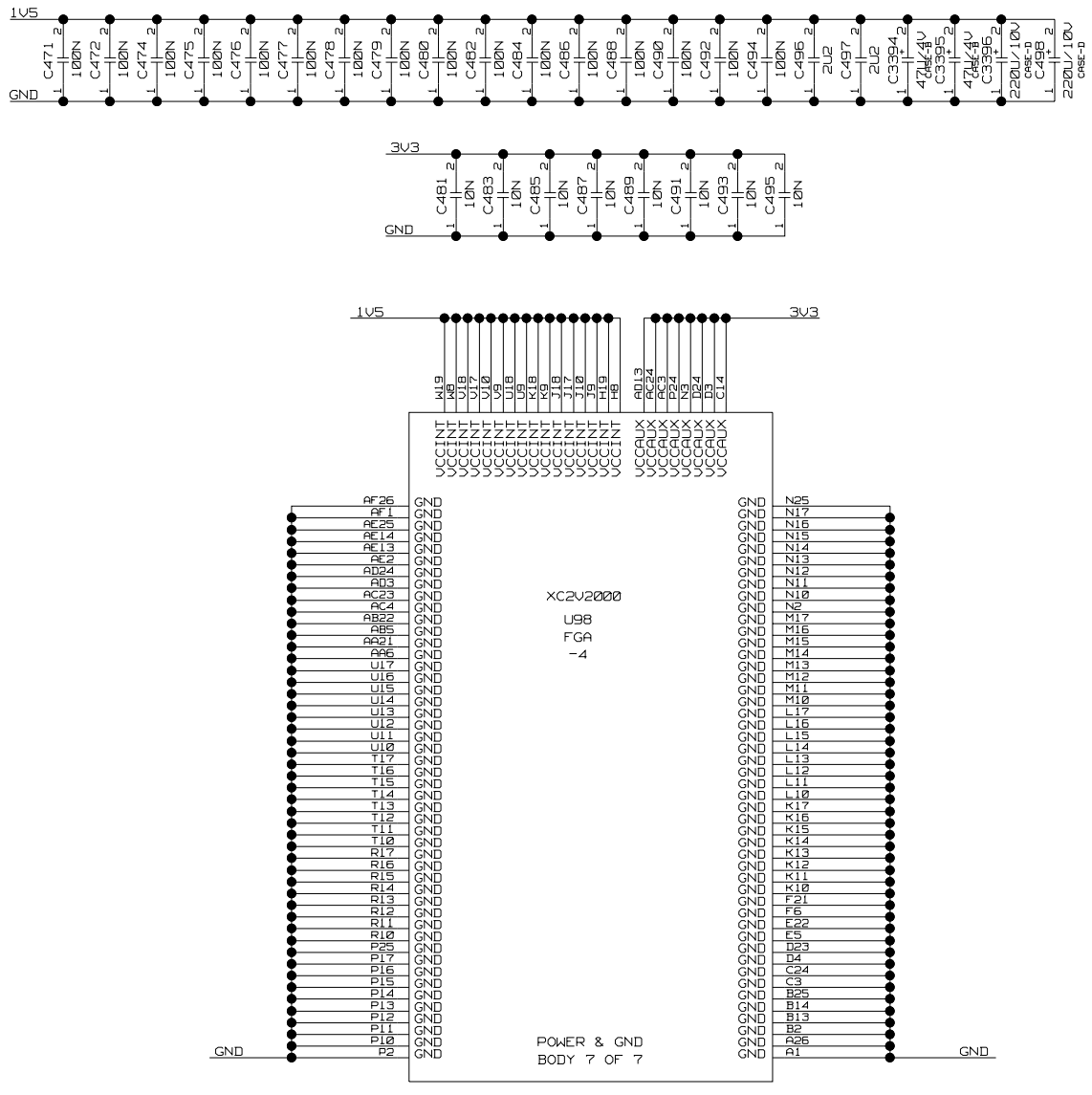

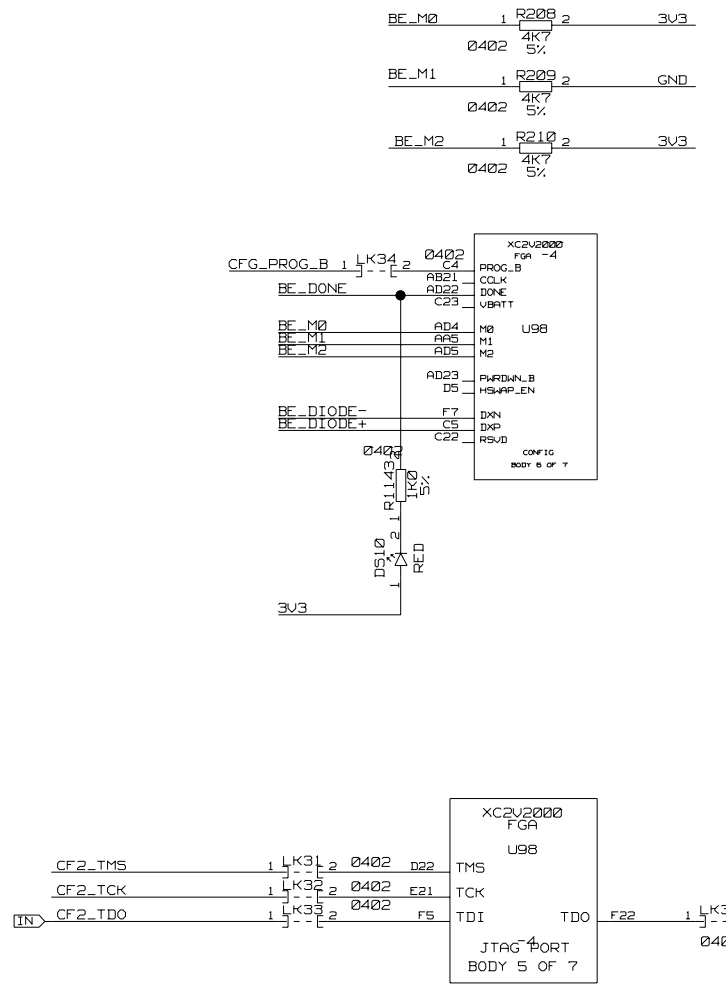

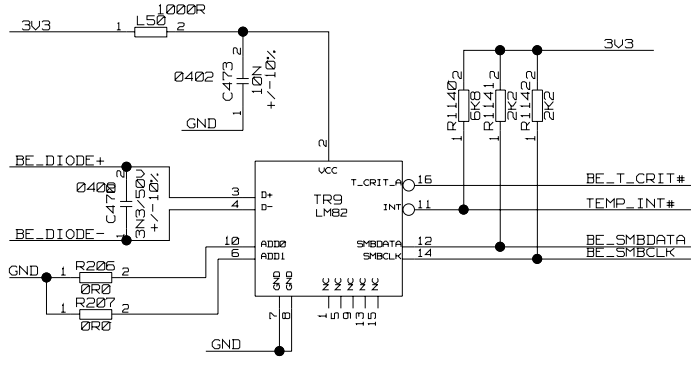

ISSUE	DATE	MOD NO.	DRN BY.	CHKD.	APPD.	STATUS
A	13-11-02	-----	S. TAGHAVIRAD	S. TAGHAVIRAD	S. TAGHAVIRAD	

USED ON CMS

© CCLRC 2002

CCLRC COUNCIL FOR THE CENTRAL LABORATORY OF THE RESEARCH COUNCILS — RUTHERFORD APPLETON LABORATORY, CHILTON, OXON OX11 0QX.

TITLE

PC3205M CIRCUIT

CMS TRACKER FED v1

BACK END FPGA

A 2-TE-0070-020-03-A

TOTAL NO. OF SHEETS 95

A 2-TE-0070-020-03-A