A | 2-TE-0070-020-01-A | THIS DRAWING CONFORMS TO B.S. 3939

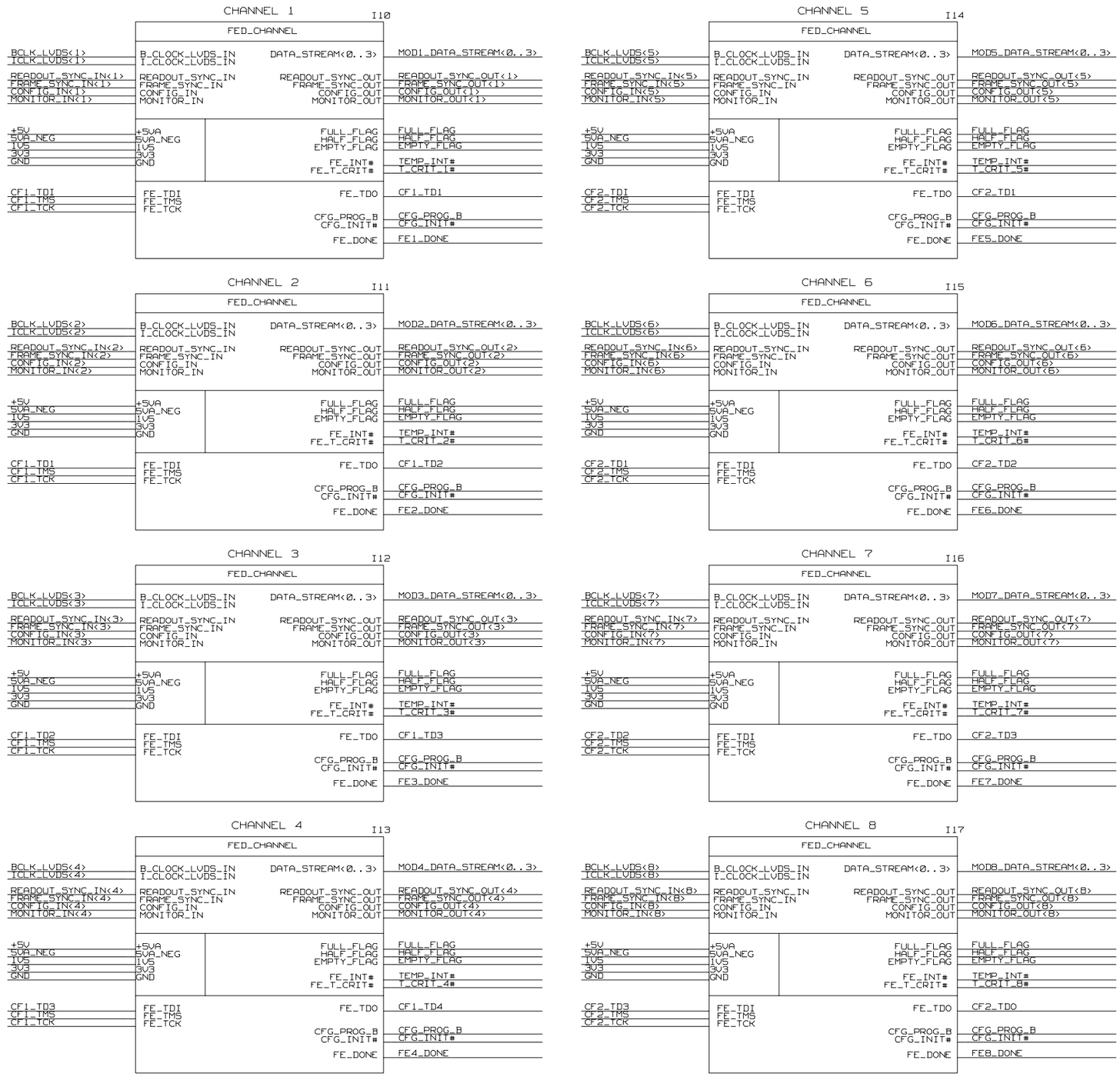

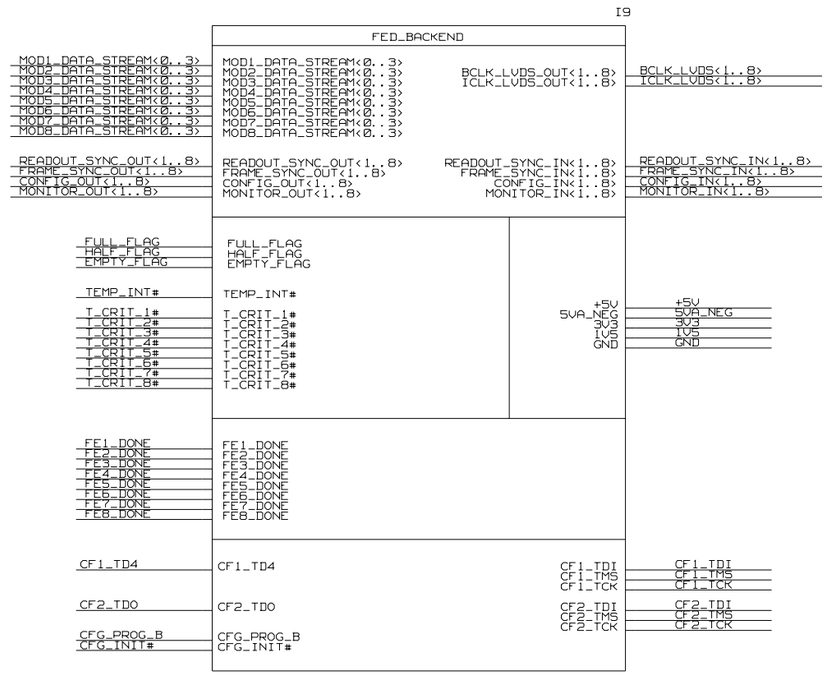

A	13-11-02	-----	S. TAGHAVIRAD	S. TAGHAVIRAD	S. TAGHAVIRAD	
ISSUE	DATE	MOD NO.	DRN BY.	CHKD.	APPD.	STATUS

USED ON CMS

© CCLRC 2002

CCLRC
COUNCIL FOR THE CENTRAL LABORATORY OF THE RESEARCH COUNCILS
RUTHERFORD APPLETON LABORATORY, CHILTON, OXON OX11 0QX.

TITLE

PC3205M CIRCUIT

CMS TRACKER FED v1

TOP LEVEL

A 2-TE-0070-020-01-A

TOTAL NO. OF SHEETS 95

A 2-TE-0070-020-01-A

A | 2-TE-0070-020<16>A | THIS DRAWING CONFORMS TO B.S. 3939

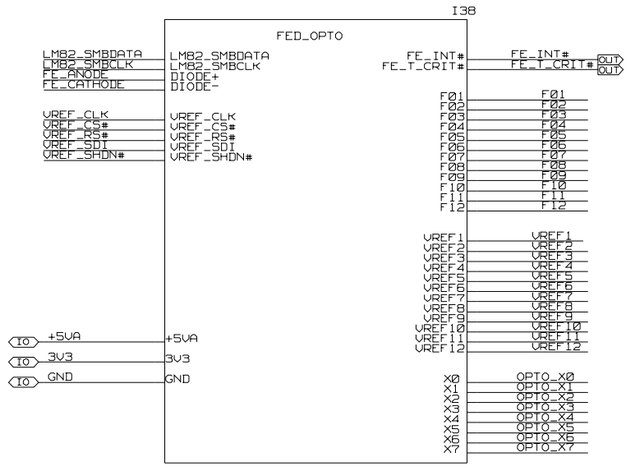

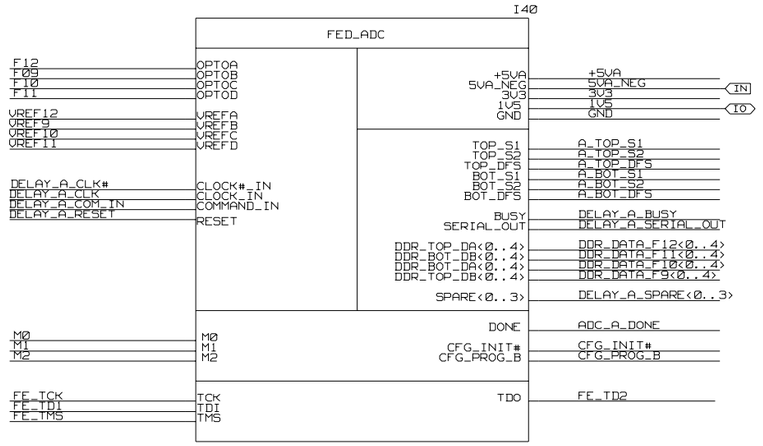

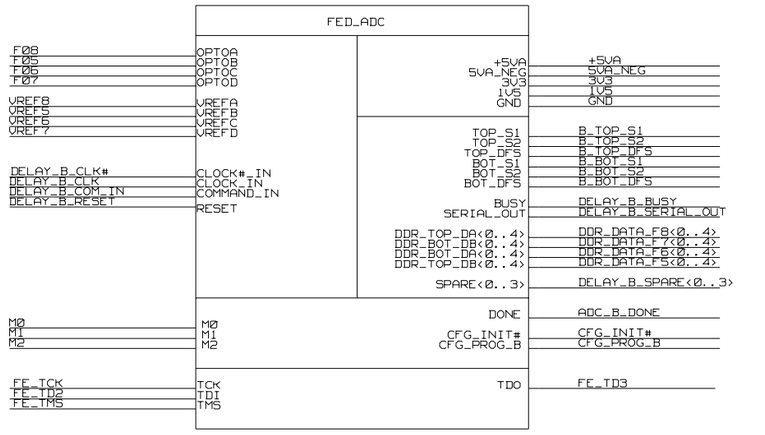

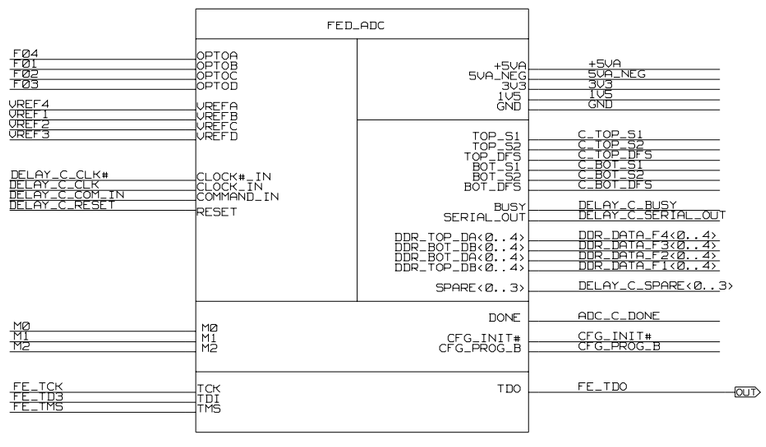

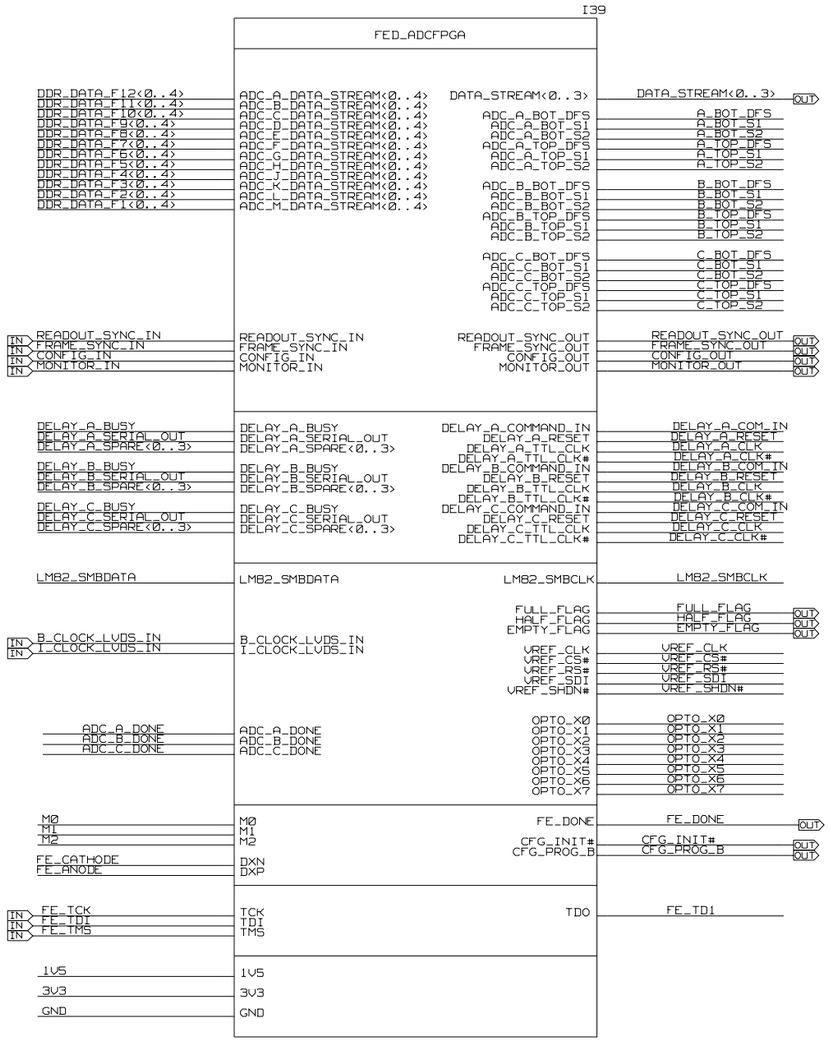

ISSUE	DATE	MOD NO.	DRN BY.	CHKD.	APPD.	STATUS
A	13-11-02	-----	S. TAGHAVIRAD	S. TAGHAVIRAD	S. TAGHAVIRAD	

USED ON CMS

© CCLRC 2002

CCLRC COUNCIL FOR THE CENTRAL LABORATORY OF THE RESEARCH COUNCILS — RUTHERFORD APPLETON LABORATORY, CHILTON, OXON OX11 0QX.

TITLE

PC3205M CIRCUIT

CMS TRACKER FED v1

CHANNEL

A 2-TE-0070-020<16>A

TOTAL NO. OF SHEETS 95

A 2-TE-0070-020<16>A

A | 2-TE-0070-020<17>A | THIS DRAWING CONFORMS TO B.S. 3939

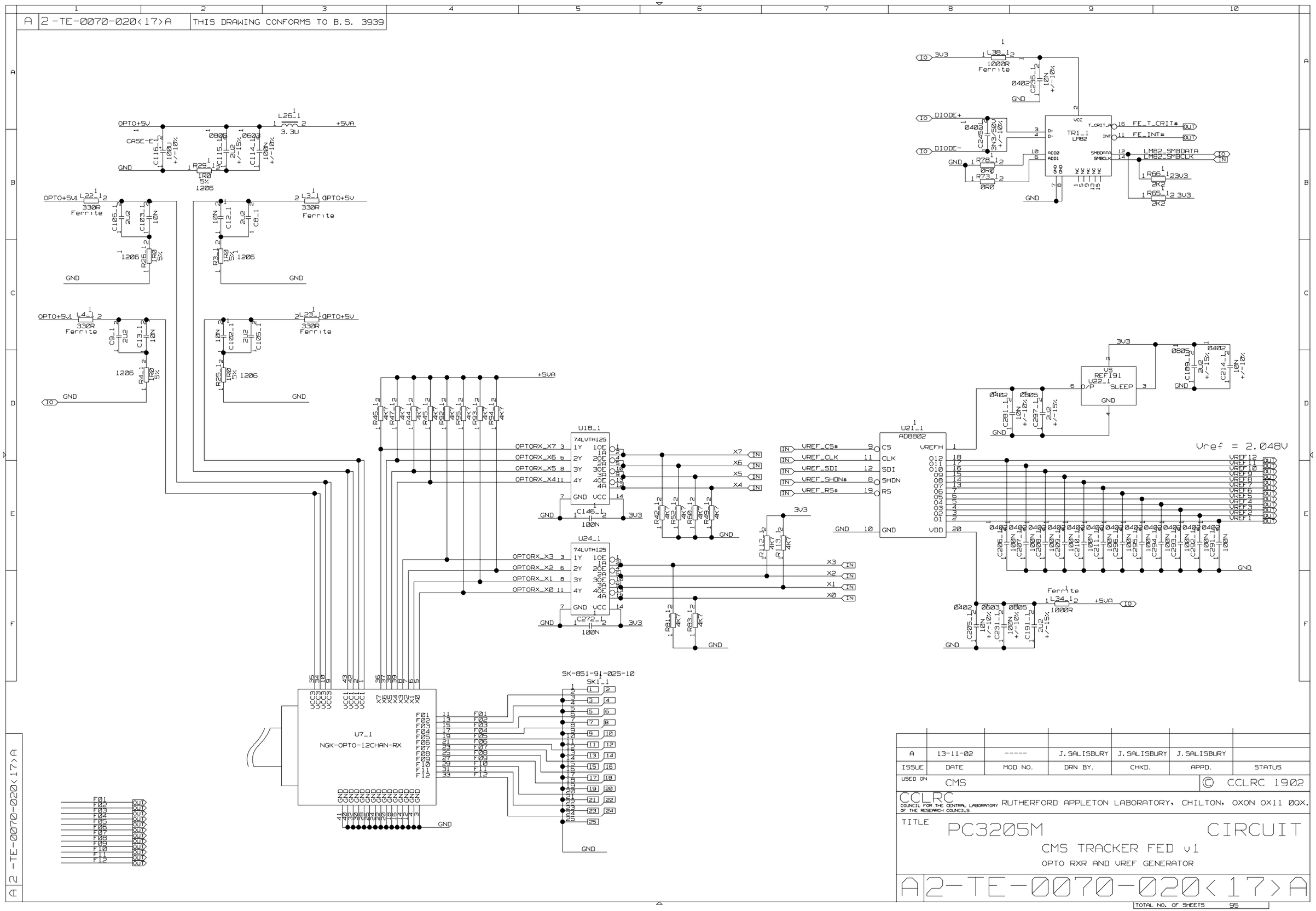

A	13-11-02	-----	J. SALISBURY	J. SALISBURY	J. SALISBURY	
ISSUE	DATE	MOD NO.	DRN BY.	CHKD.	APPD.	STATUS

USED ON CMS

© CCLRC 1902

CCLRC COUNCIL FOR THE CENTRAL LABORATORY OF THE RESEARCH COUNCILS

RUTHERFORD APPLETON LABORATORY, CHILTON, OXON OX11 0QX.

TITLE

PC3205M CIRCUIT

CMS TRACKER FED v1

OPTO RXR AND VREF GENERATOR

A 2-TE-0070-020<17>A

TOTAL NO. OF SHEETS 95

A 2-TE-0070-020<17>A

A | 2-TE-0070-020<18>A | THIS DRAWING CONFORMS TO B.S. 3939

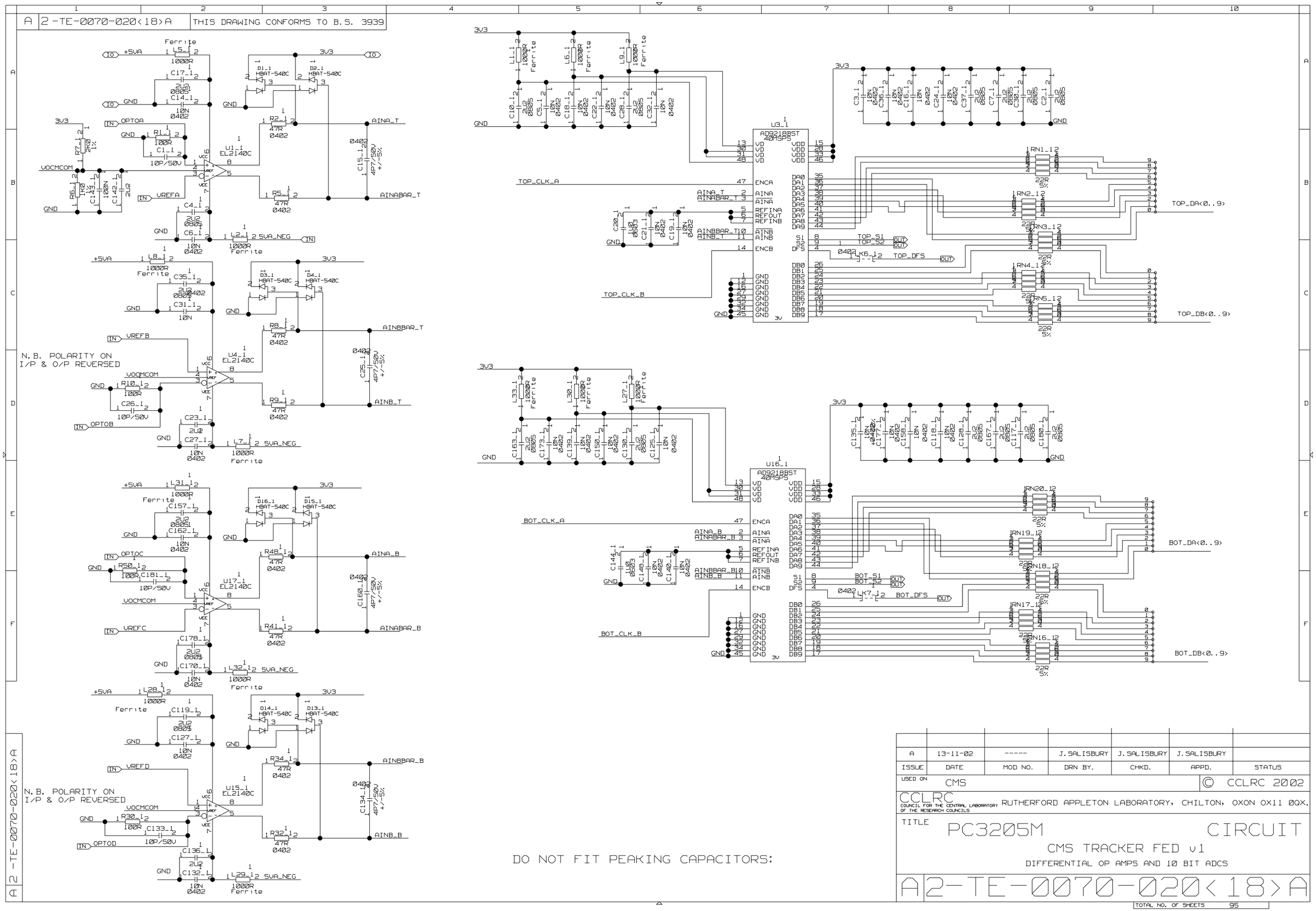

DO NOT FIT PEAKING CAPACITORS:

A	13-11-02	-----	J.SALISBURY	J.SALISBURY	J.SALISBURY	
ISSUE	DATE	MOD NO.	DRN BY.	CHKD.	APPD.	STATUS

USED ON CMS

© CCLRC 2002

CCLRC COUNCIL FOR THE CENTRAL LABORATORY OF THE RESEARCH COUNCILS — RUTHERFORD APPLETON LABORATORY, CHILTON, OXON OX11 0QX.

TITLE

PC3205M CIRCUIT

CMS TRACKER FED v1

DIFFERENTIAL OP AMPS AND 10 BIT ADCS

A 2-TE-0070-020<18>A

TOTAL NO. OF SHEETS 95

A 2-TE-0070-020<18>A

A | 2-TE-0070-020<19>A | THIS DRAWING CONFORMS TO B.S. 3939

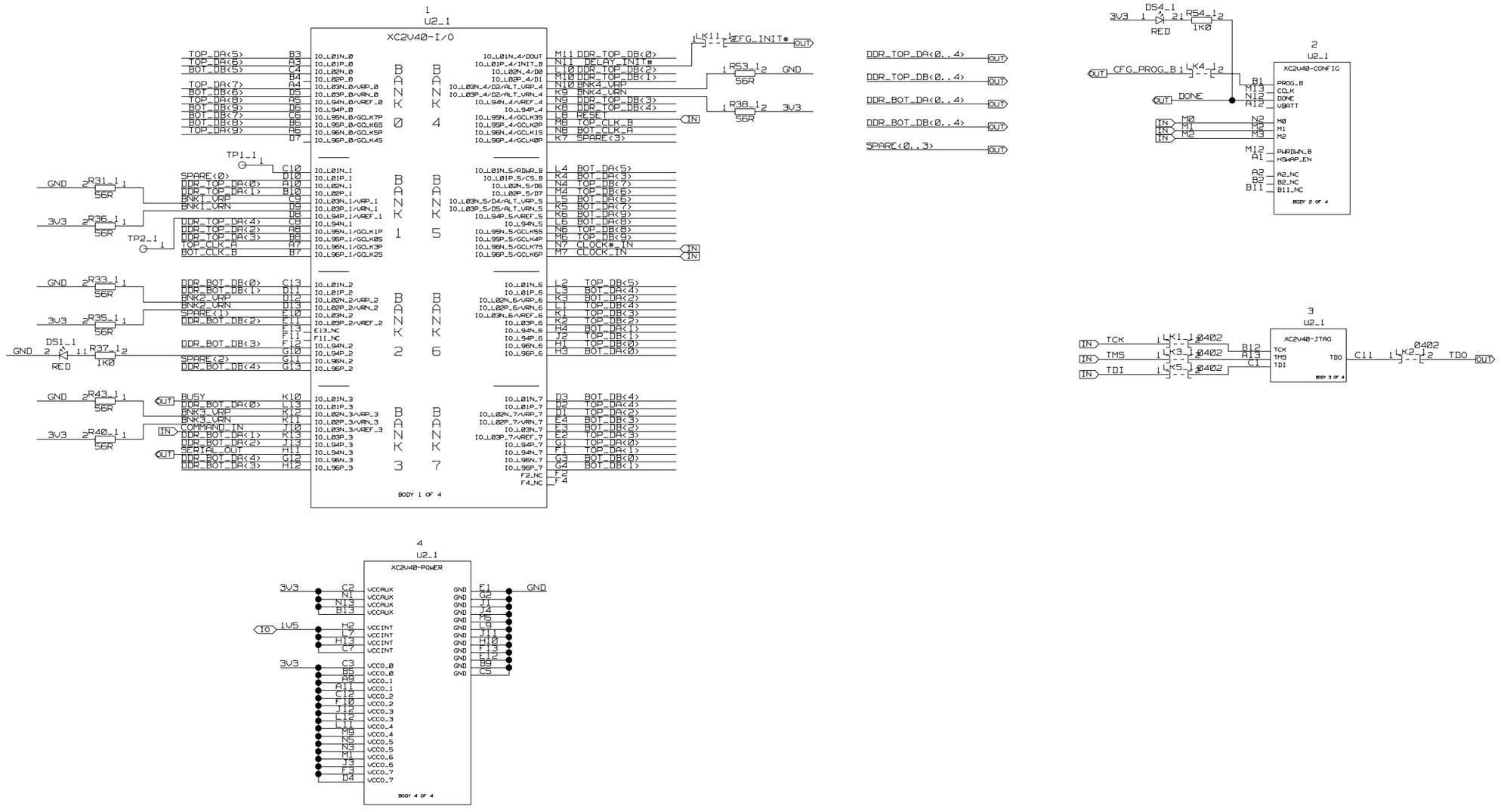

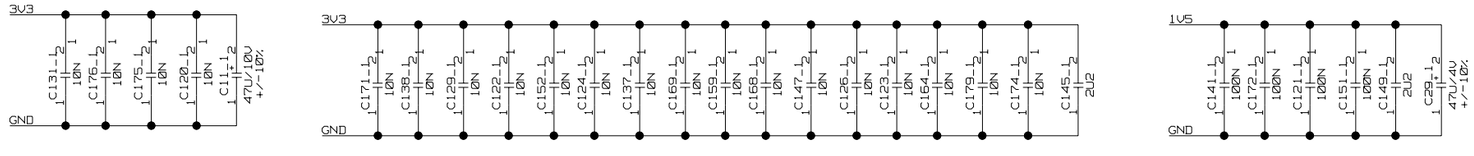

A	13-11-02	-----	S. TAGHAVIRAD	S. TAGHAVIRAD	S. TAGHAVIRAD	
ISSUE	DATE	MOD NO.	DRN BY.	CHKD.	APPD.	STATUS
USED ON	CMS				©	CCLRC 2002

CCLRC COUNCIL FOR THE CENTRAL LABORATORY OF THE RESEARCH COUNCILS — RUTHERFORD APPLETON LABORATORY, CHILTON, OXON OX11 0QX.

TITLE PC3205M CIRCUIT

CMS TRACKER FED v1

DELAY FPGA

A 2-TE-0070-020<19>A

TOTAL NO. OF SHEETS 95

A 2-TE-0070-020<19>A

A | 2-TE-0070-020<18>A | THIS DRAWING CONFORMS TO B.S. 3939

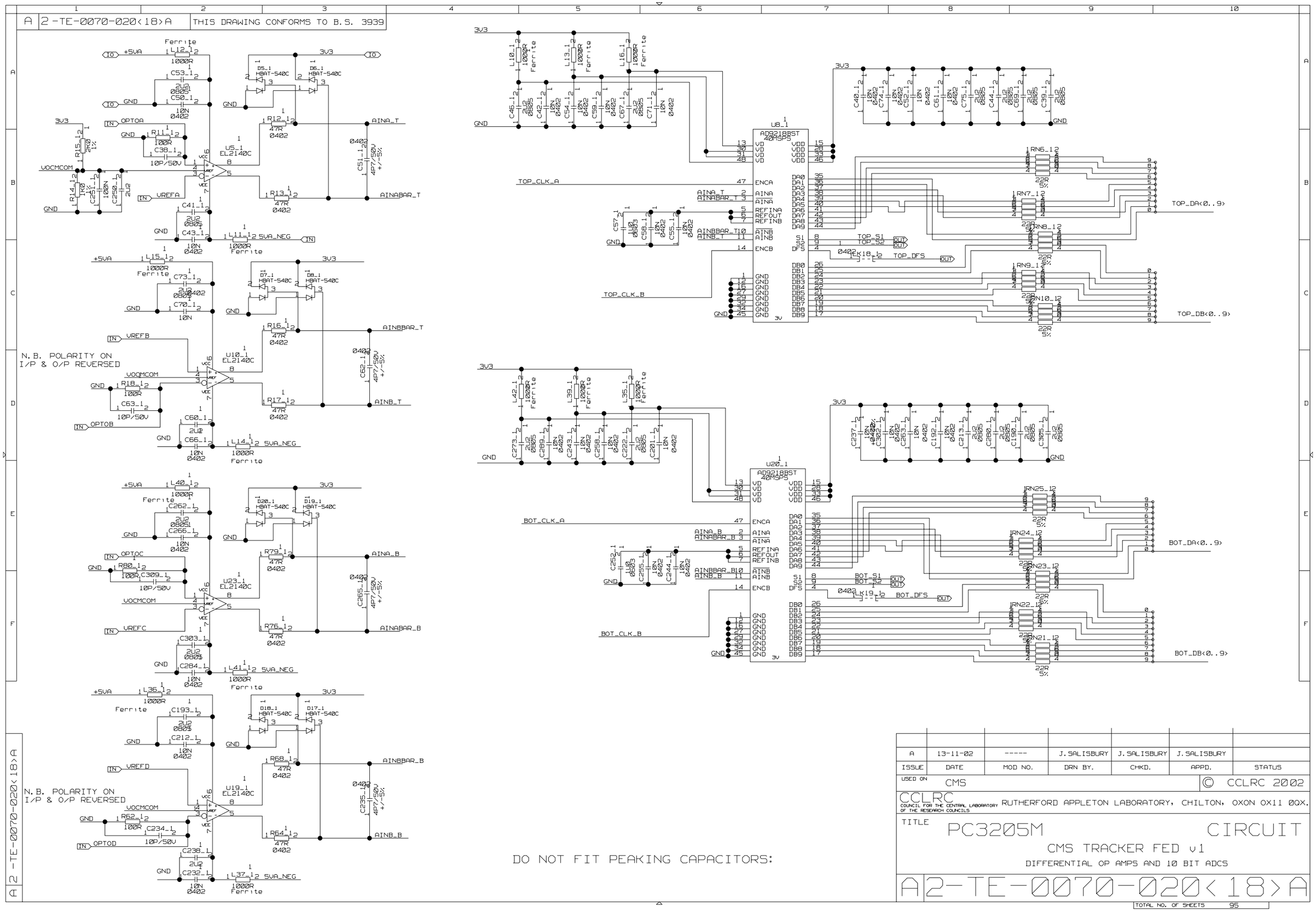

A	13-11-02	-----	J.SALISBURY	J.SALISBURY	J.SALISBURY	
ISSUE	DATE	MOD NO.	DRN BY.	CHKD.	APPD.	STATUS
USED ON	CMS				© CCLRC 2002	

CCLRC COUNCIL FOR THE CENTRAL LABORATORY OF THE RESEARCH COUNCILS — RUTHERFORD APPLETON LABORATORY, CHILTON, OXON OX11 0QX.

TITLE

PC3205M CIRCUIT

CMS TRACKER FED v1

DIFFERENTIAL OP AMPS AND 10 BIT ADCS

A 2-TE-0070-020<18>A

TOTAL NO. OF SHEETS 95

A 2-TE-0070-020<18>A

A | 2-TE-0070-020<19>A | THIS DRAWING CONFORMS TO B.S. 3939

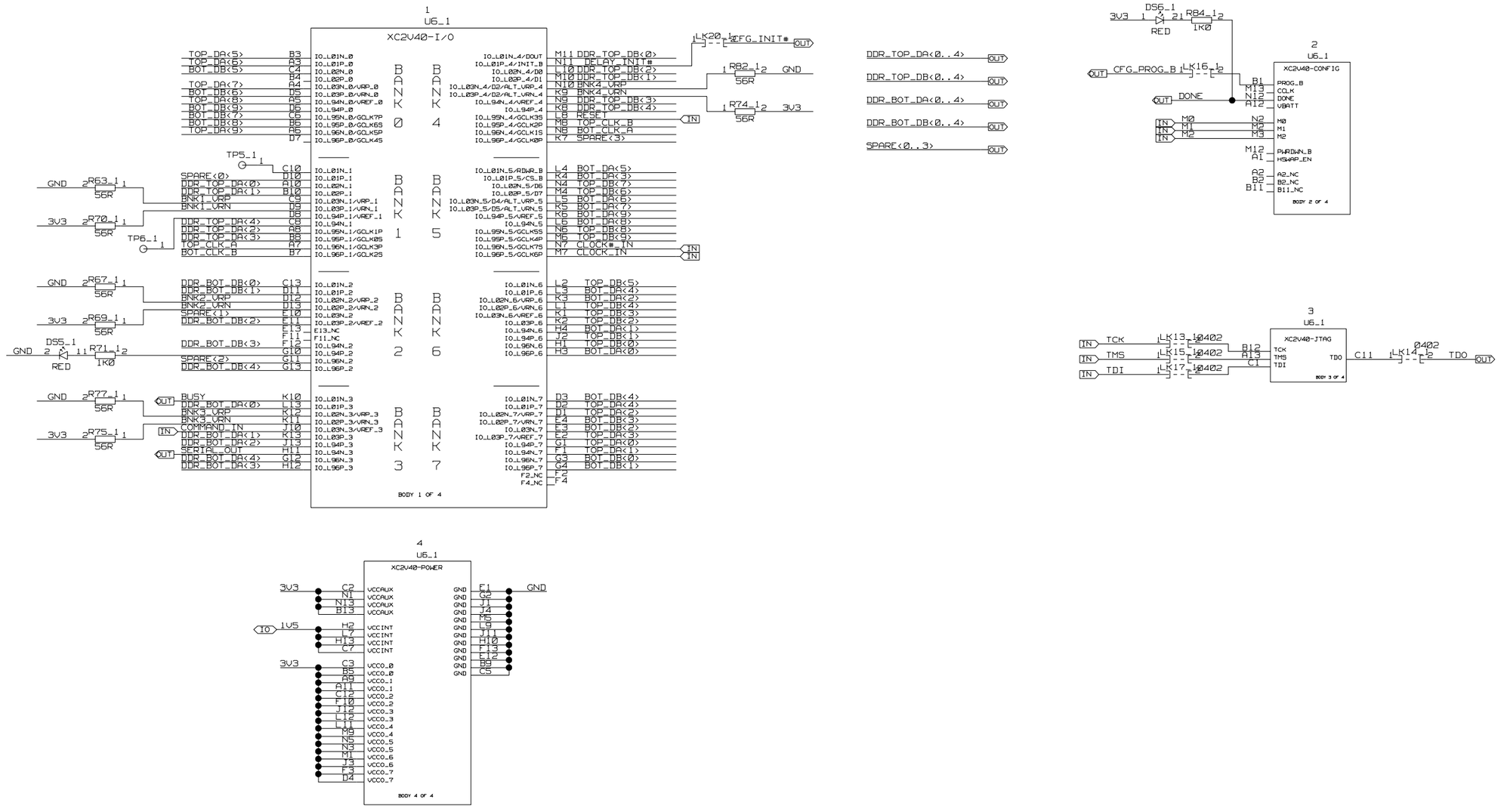

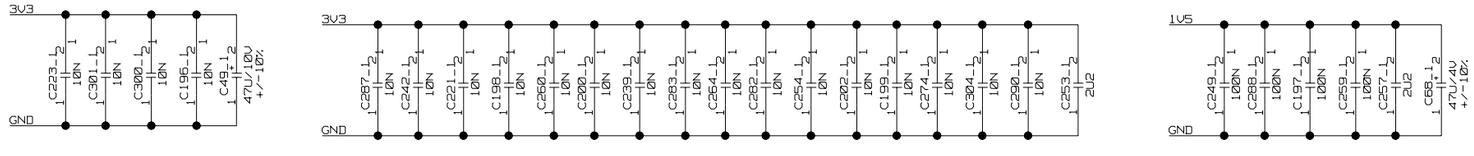

A	13-11-02	-----	S. TAGHAVIRAD	S. TAGHAVIRAD	S. TAGHAVIRAD	
ISSUE	DATE	MOD NO.	DRN BY.	CHKD.	APPD.	STATUS
USED ON	CMS				©	CCLRC 2002

CCLRC COUNCIL FOR THE CENTRAL LABORATORY OF THE RESEARCH COUNCILS — RUTHERFORD APPLETON LABORATORY, CHILTON, OXON OX11 0QX.

TITLE

PC3205M CIRCUIT

CMS TRACKER FED v1

DELAY FPGA

A 2-TE-0070-020<19>A

TOTAL NO. OF SHEETS 95

A 2-TE-0070-020<19>A

A | 2-TE-0070-020<18>A | THIS DRAWING CONFORMS TO B.S. 3939

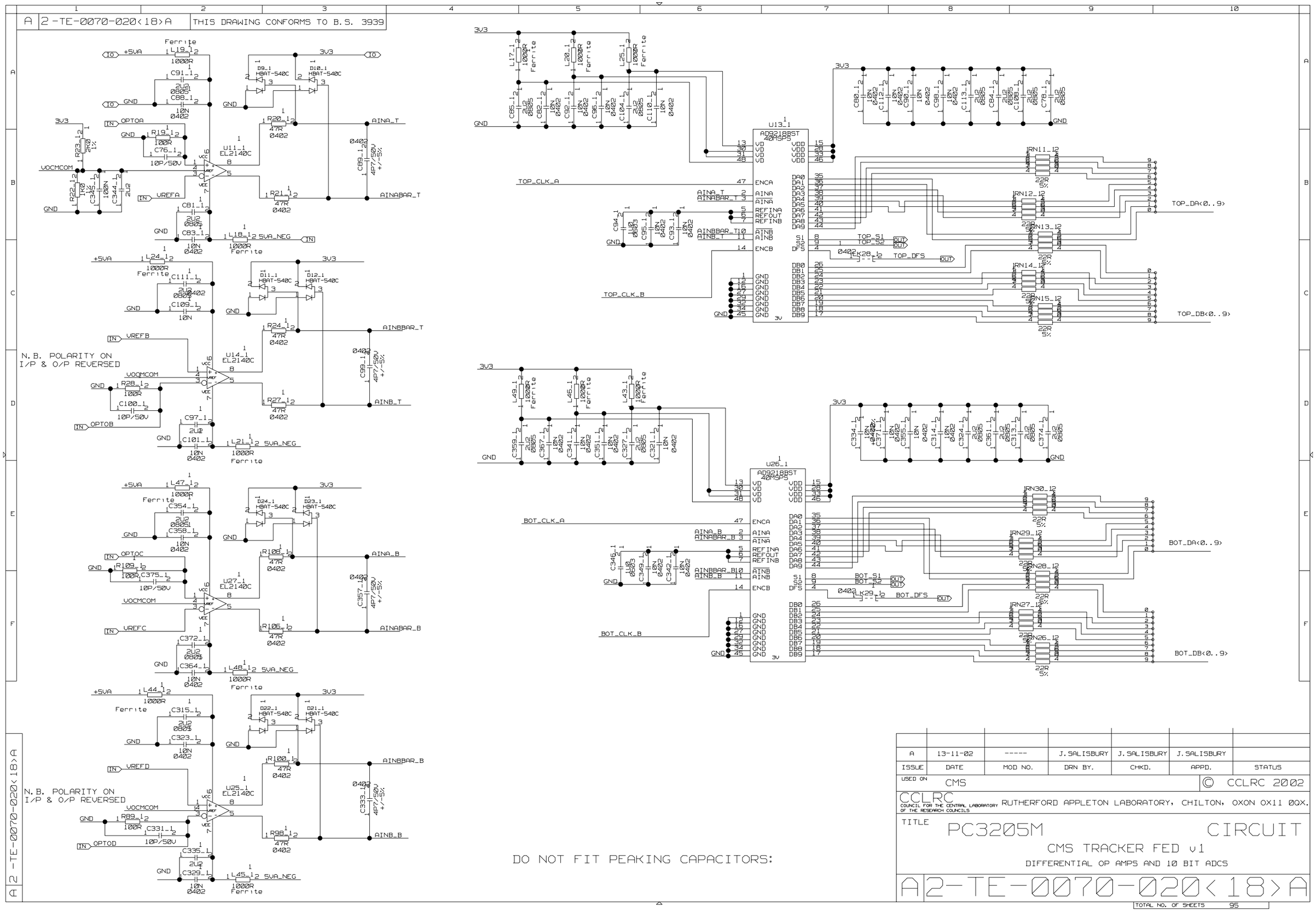

ISSUE	DATE	MOD NO.	DRN BY.	CHKD.	APPD.	STATUS
A	13-11-02	-----	J.SALISBURY	J.SALISBURY	J.SALISBURY	

USED ON CMS

© CCLRC 2002

CCLRC COUNCIL FOR THE CENTRAL LABORATORY OF THE RESEARCH COUNCILS — RUTHERFORD APPLETON LABORATORY, CHILTON, OXON OX11 0QX.

TITLE

PC3205M CIRCUIT

CMS TRACKER FED v1

DIFFERENTIAL OP AMPS AND 10 BIT ADCS

A 2-TE-0070-020<18>A

TOTAL NO. OF SHEETS 95

A 2-TE-0070-020<18>A

A | 2-TE-0070-020<19>A | THIS DRAWING CONFORMS TO B.S. 3939

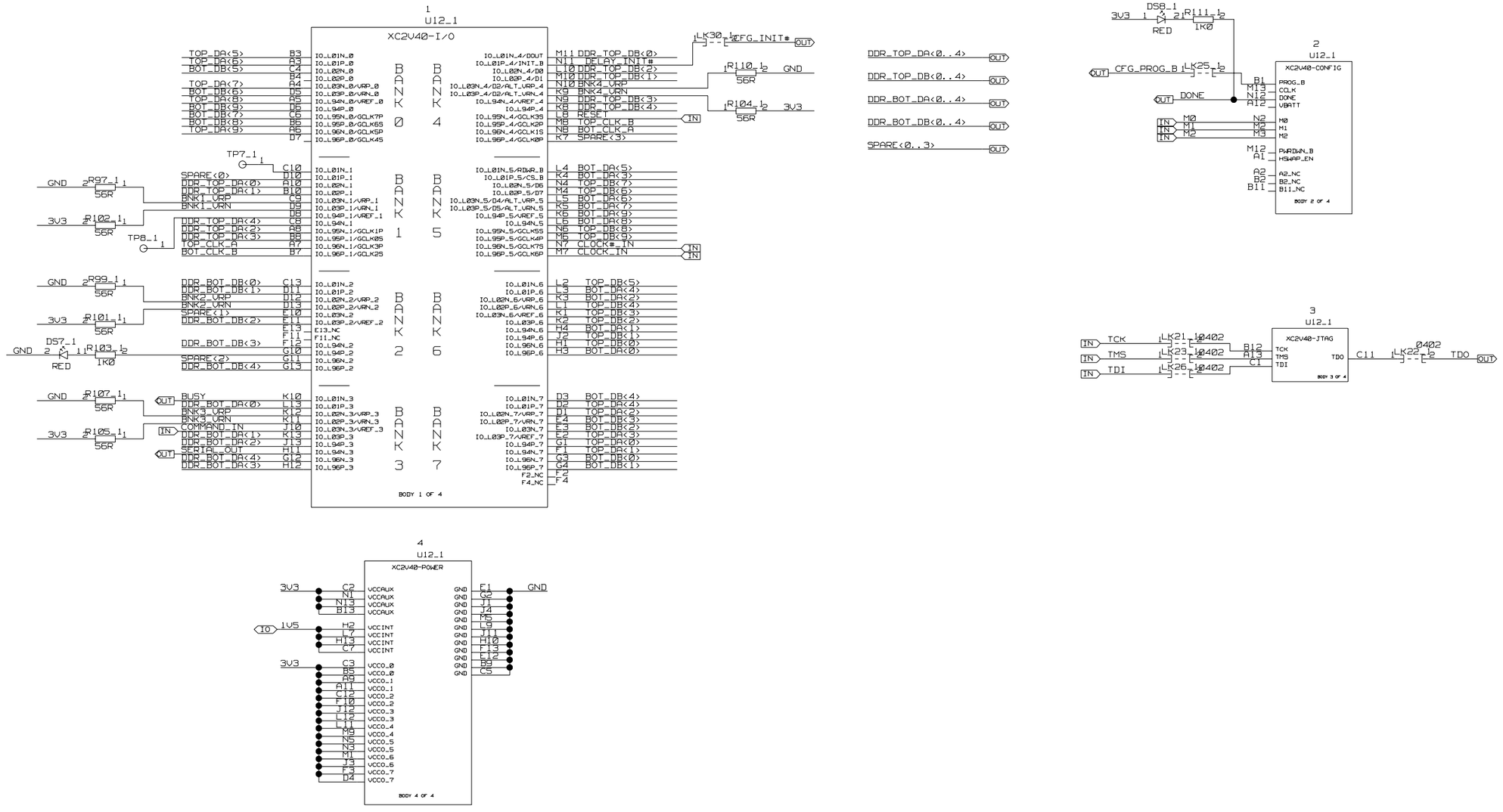

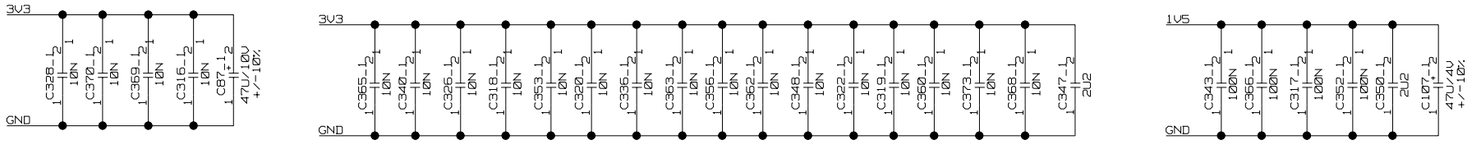

A	13-11-02	-----	S. TAGHAVIRAD	S. TAGHAVIRAD	S. TAGHAVIRAD	
ISSUE	DATE	MOD NO.	DRN BY.	CHKD.	APPD.	STATUS
USED ON	CMS				©	CCLRC 2002

CCLRC COUNCIL FOR THE CENTRAL LABORATORY OF THE RESEARCH COUNCILS — RUTHERFORD APPLETON LABORATORY, CHILTON, OXON OX11 0QX.

TITLE

PC3205M CIRCUIT

CMS TRACKER FED v1

DELAY FPGA

A 2-TE-0070-020<19>A

TOTAL NO. OF SHEETS 95

A 2-TE-0070-020<19>A

A | 2-TE-0070-020<20>A | THIS DRAWING CONFORMS TO B.S. 3939

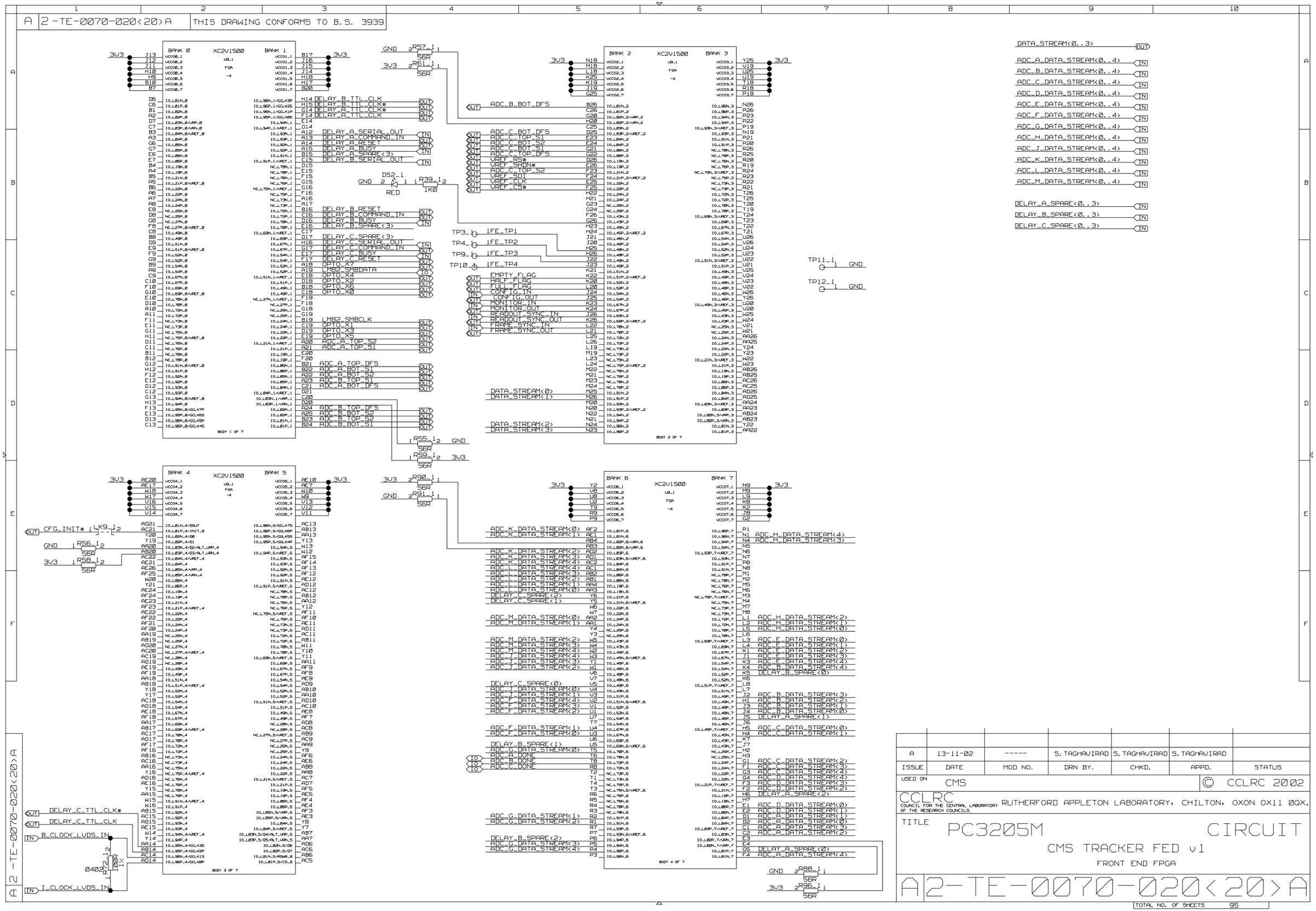

ISSUE	DATE	MOD NO.	DRN BY.	CHKD.	APPD.	STATUS
A	13-11-02	-----	S. TAGHAVIRAD	S. TAGHAVIRAD	S. TAGHAVIRAD	

USED ON CMS

© CCLRC 2002

CCLRC COUNCIL FOR THE CENTRAL LABORATORY OF THE RESEARCH COUNCILS — RUTHERFORD APPLETON LABORATORY, CHILTON, OXON OX11 0QX.

TITLE

PC3205M CIRCUIT

CMS TRACKER FED v1

FRONT END FPGA

A 2-TE-0070-020<20>A

TOTAL NO. OF SHEETS 95

A | 2-TE-0070-020<21>A | THIS DRAWING CONFORMS TO B.S. 3939

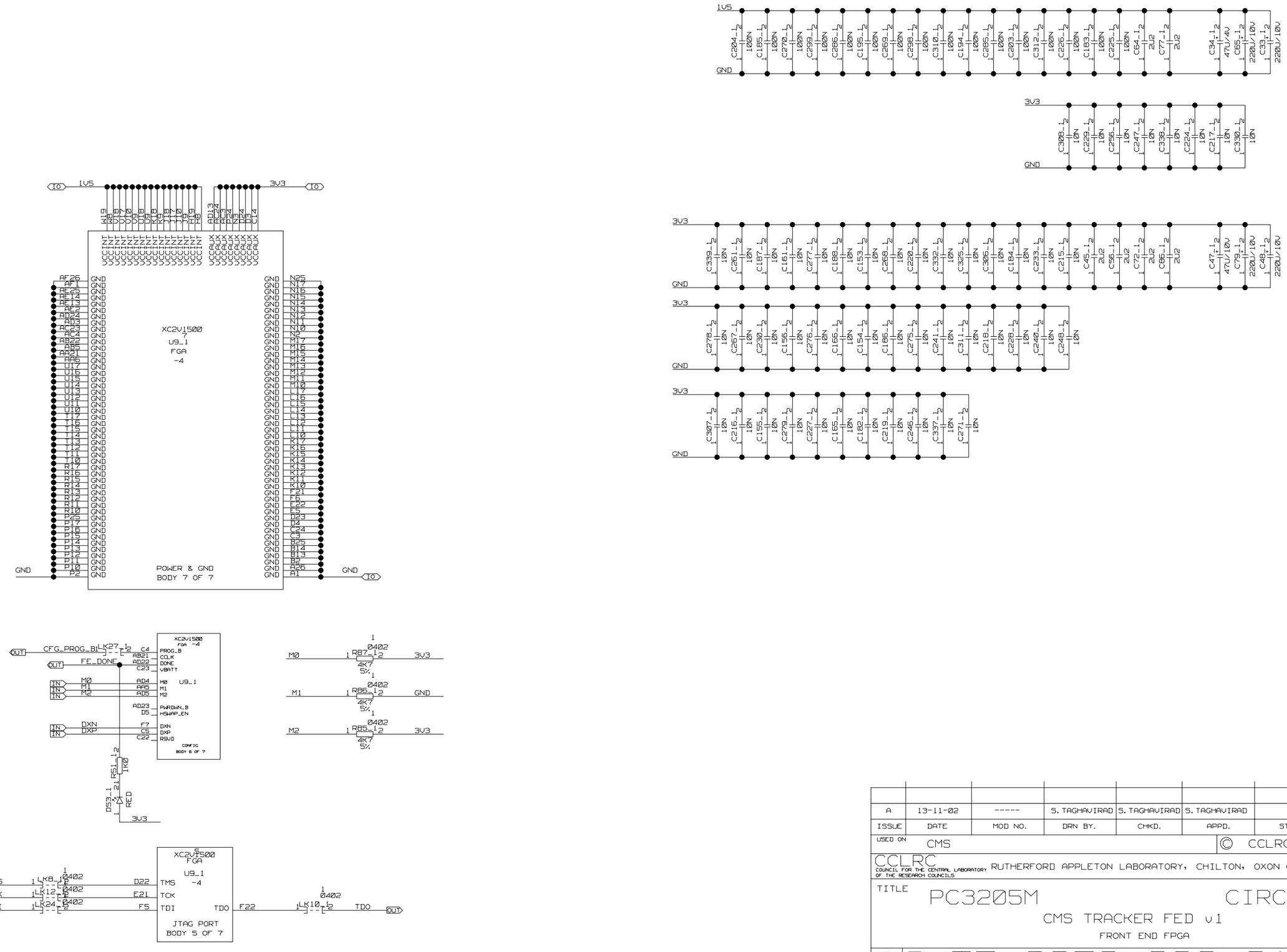

A	13-11-02	-----	S. TAGHAVIRAD	S. TAGHAVIRAD	S. TAGHAVIRAD	
ISSUE	DATE	MOD NO.	DRN BY.	CHKD.	APPD.	STATUS

USED ON CMS

© CCLRC 2002

CCLRC COUNCIL FOR THE CENTRAL LABORATORY OF THE RESEARCH COUNCILS — RUTHERFORD APPLETON LABORATORY, CHILTON, OXON OX11 0QX.

TITLE

PC3205M CIRCUIT

CMS TRACKER FED v1

FRONT END FPGA

A 2-TE-0070-020<21>A

TOTAL NO. OF SHEETS 95

A 2-TE-0070-020<21>A

A | 2-TE-0070-020-02-A | THIS DRAWING CONFORMS TO B.S. 3939

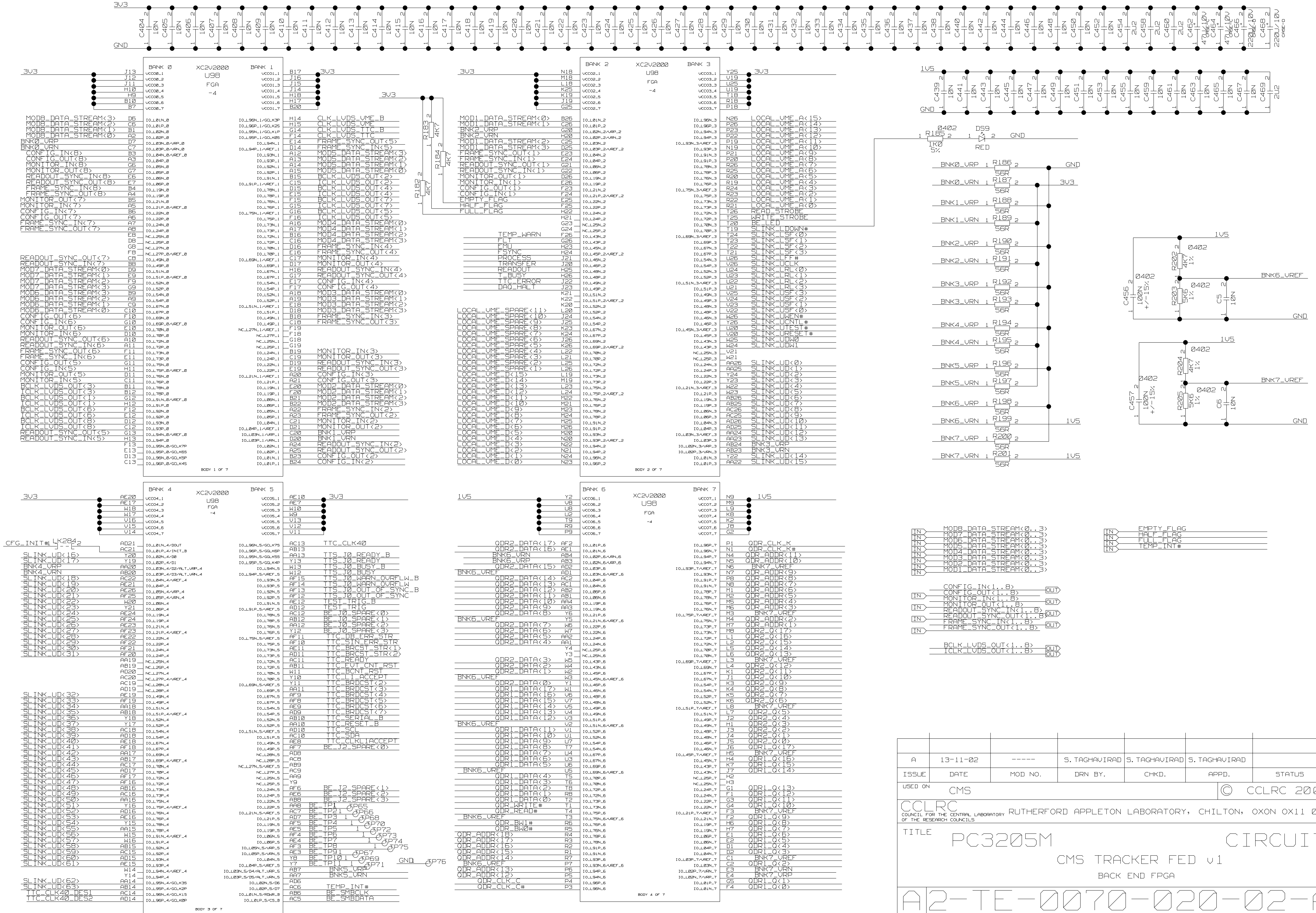

ISSUE	DATE	MOD NO.	DRN BY.	CHKD.	APPD.	STATUS
A	13-11-02	-----	S. TAGHAVIRAD	S. TAGHAVIRAD	S. TAGHAVIRAD	

USED ON CMS

© CCLRC 2002

CCLRC COUNCIL FOR THE CENTRAL LABORATORY OF THE RESEARCH COUNCILS — RUTHERFORD APPLETON LABORATORY, CHILTON, OXON OX11 0QX.

TITLE PC3205M CIRCUIT

CMS TRACKER FED v1

BACK END FPGA

A 2-TE-0070-020-02-A

TOTAL NO. OF SHEETS 95

A | 2-TE-0070-020-03-A | THIS DRAWING CONFORMS TO B.S. 3939

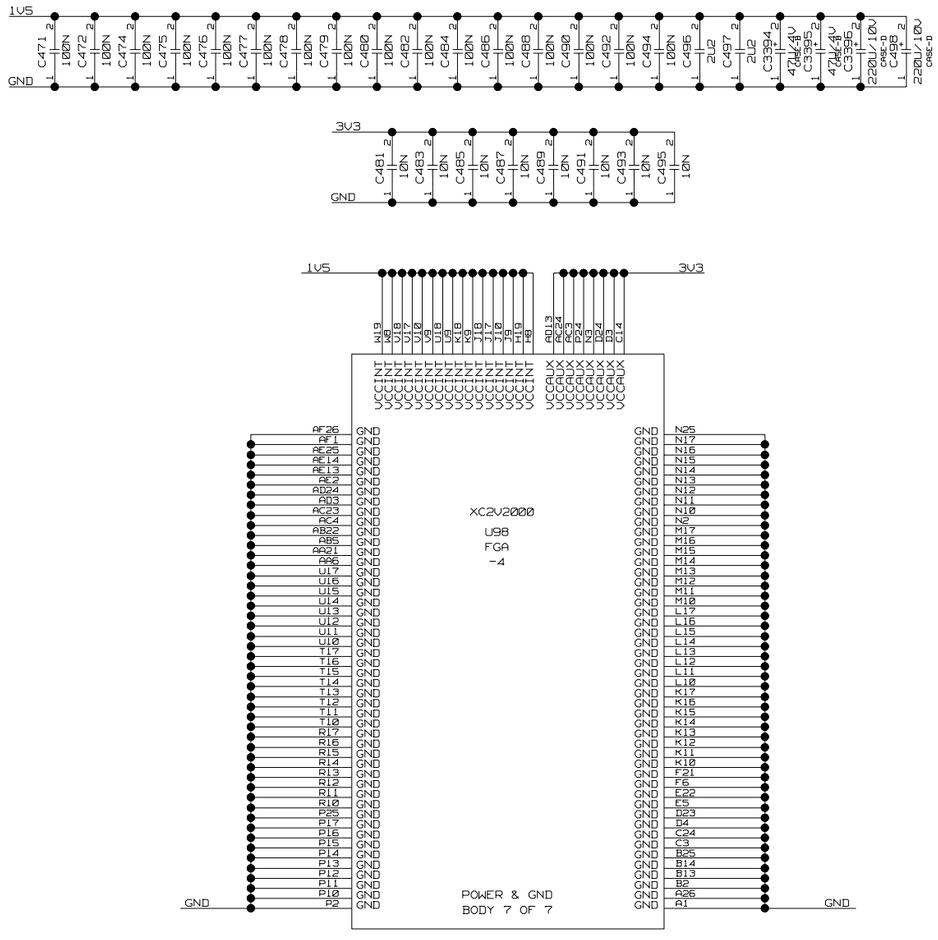

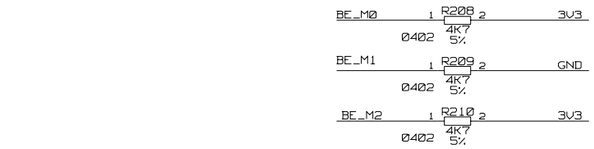

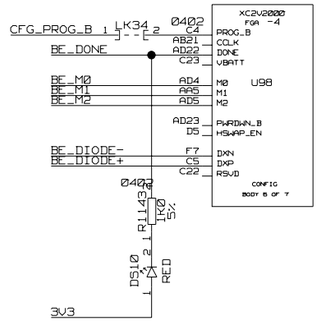

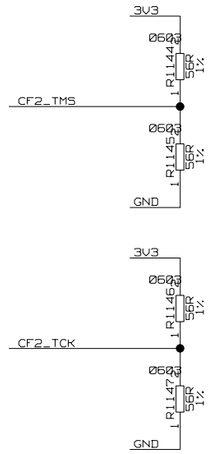

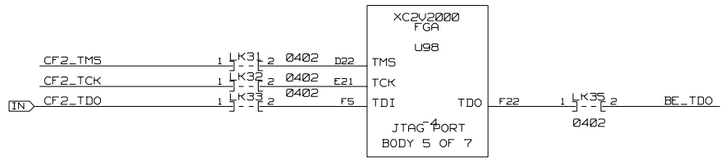

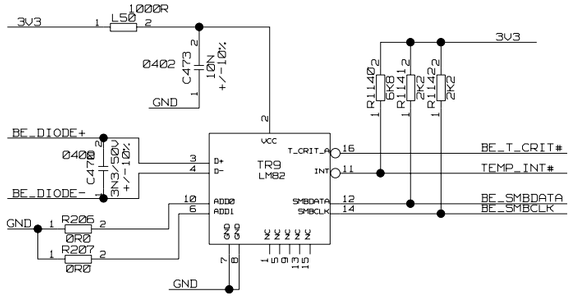

ISSUE	DATE	MOD NO.	DRN BY.	CHKD.	APPD.	STATUS
A	13-11-02	-----	S. TAGHAVIRAD	S. TAGHAVIRAD	S. TAGHAVIRAD	

USED ON CMS

© CCLRC 2002

CCLRC COUNCIL FOR THE CENTRAL LABORATORY OF THE RESEARCH COUNCILS — RUTHERFORD APPLETON LABORATORY, CHILTON, OXON OX11 0QX.

TITLE

PC3205M CIRCUIT

CMS TRACKER FED v1

BACK END FPGA

A 2-TE-0070-020-03-A

TOTAL NO. OF SHEETS 95

A 2-TE-0070-020-03-A

A | 2-TE-0070-020-04-A | THIS DRAWING CONFORMS TO B.S. 3939

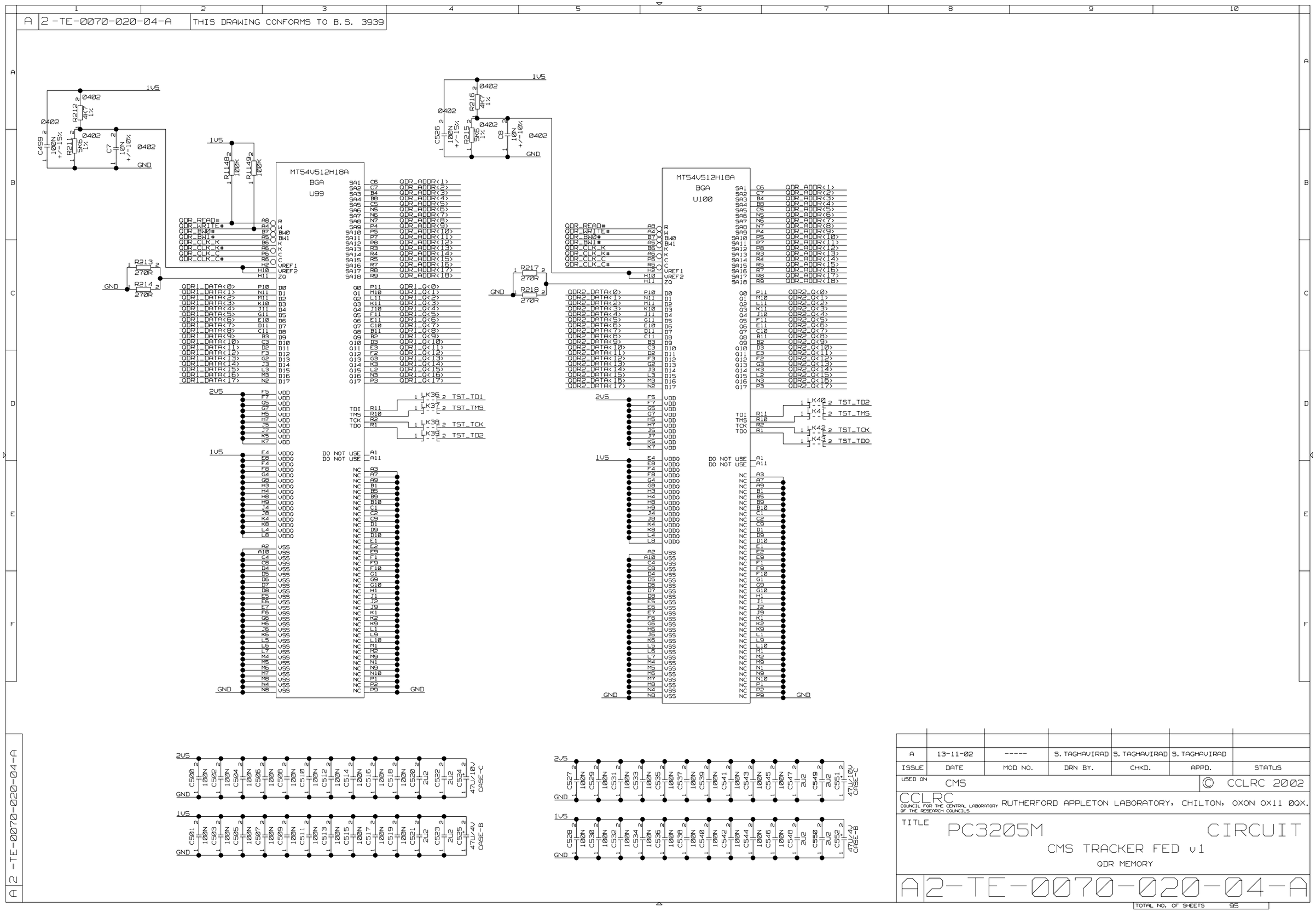

ISSUE	DATE	MOD NO.	DRN BY.	CHKD.	APPD.	STATUS
A	13-11-02	-----	S. TAGHAVIRAD	S. TAGHAVIRAD	S. TAGHAVIRAD	

USED ON CMS

© CCLRC 2002

CCLRC
COUNCIL FOR THE CENTRAL LABORATORY OF THE RESEARCH COUNCILS
RUTHERFORD APPLETON LABORATORY, CHILTON, OXON OX11 0QX.

TITLE

PC3205M CIRCUIT

CMS TRACKER FED v1

QDR MEMORY

A 2-TE-0070-020-04-A

TOTAL NO. OF SHEETS 95

A 2-TE-0070-020-04-A

A | 2 -TE-0070-020-05-A | THIS DRAWING CONFORMS TO B.S. 3939

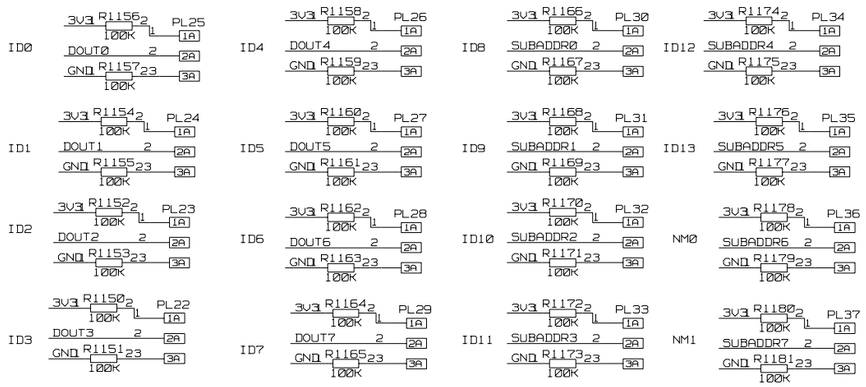

NM0 AND NM1 SHOULD BE SET TO GND
FOR NORMAL OPERATION

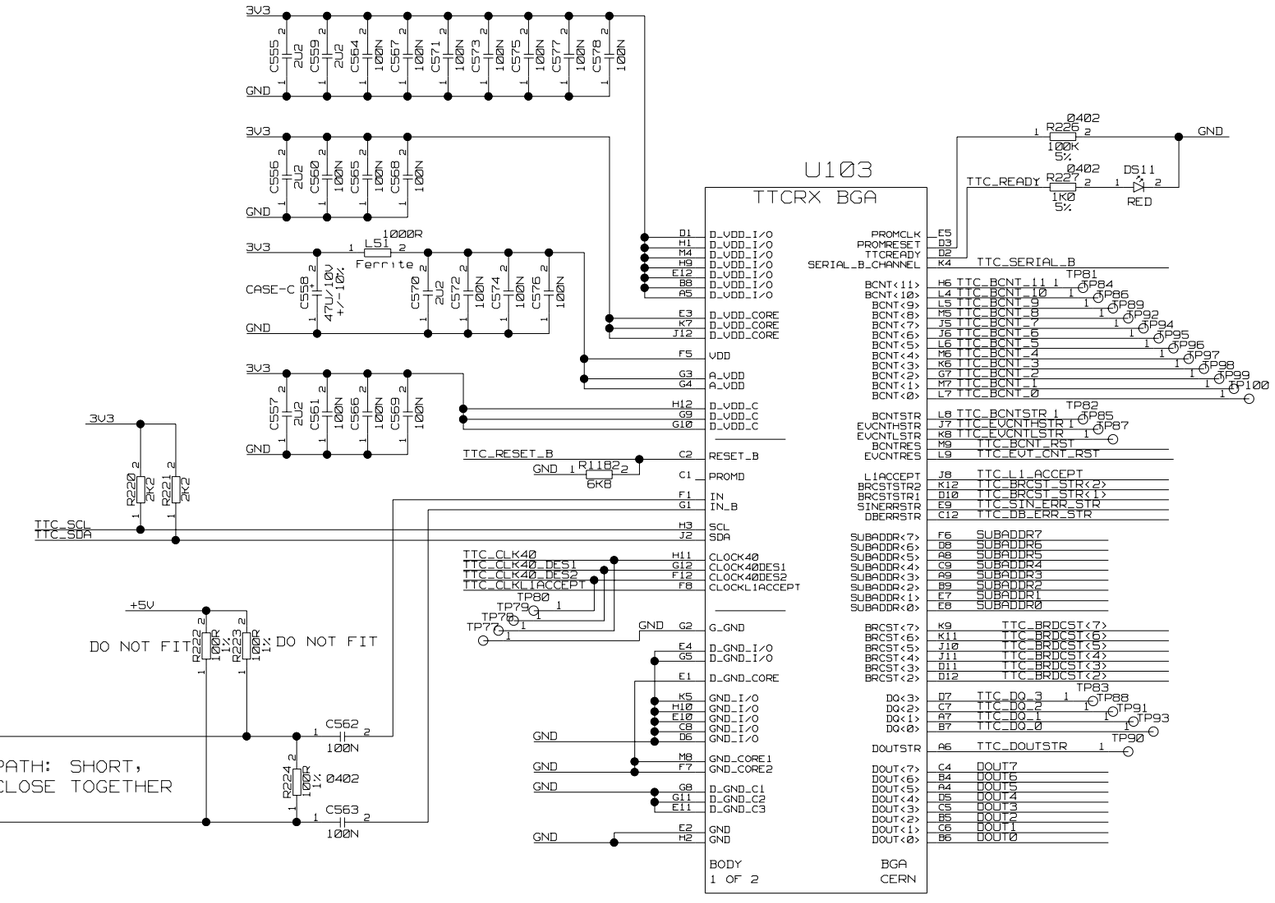

CONNECT NC PINS TO GND

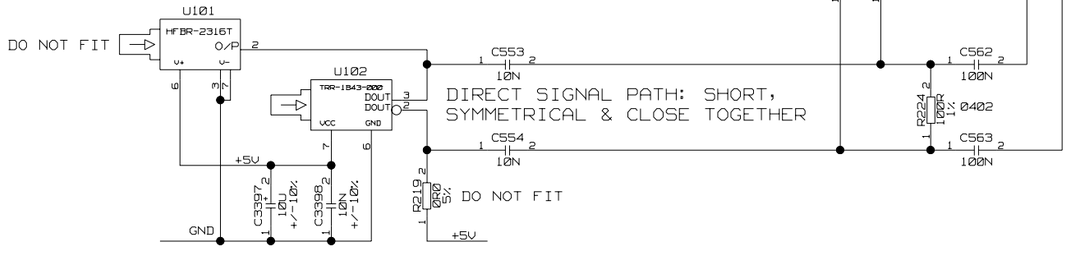

OPTIMALLY PLACE FOR DIFFERENTIAL

DO NOT FIT SINGLE-ENDED PIN DIODE OPTION

A	13-11-02	-----	S. TAGHAVIRAD	S. TAGHAVIRAD	S. TAGHAVIRAD	
ISSUE	DATE	MOD NO.	DRN BY.	CHKD.	APPD.	STATUS

USED ON CMS

© CCLRC 2002

CCLRC COUNCIL FOR THE CENTRAL LABORATORY OF THE RESEARCH COUNCILS — RUTHERFORD APPLETON LABORATORY, CHILTON, OXON OX11 0QX.

TITLE PC3205M CIRCUIT

CMS TRACKER FED v1

TTC RECEIVER AND PIN DIODE CONNECTOR

A 2-TE-0070-020-05-A

TOTAL NO. OF SHEETS 95

A 2 -TE-0070-020-05-A

A | 2-TE-0070-020-06-A | THIS DRAWING CONFORMS TO B.S. 3939

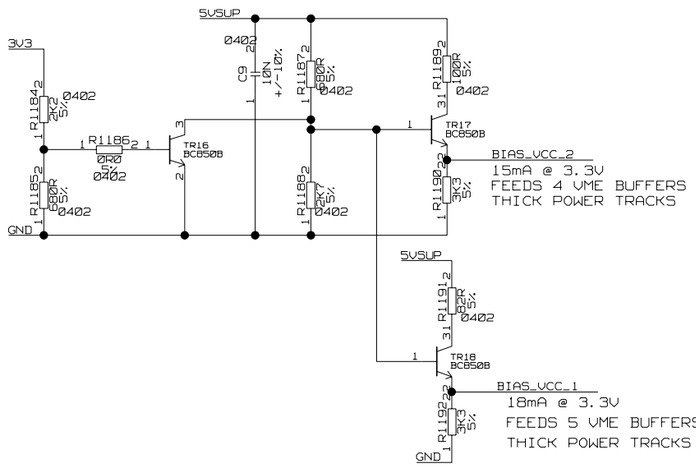

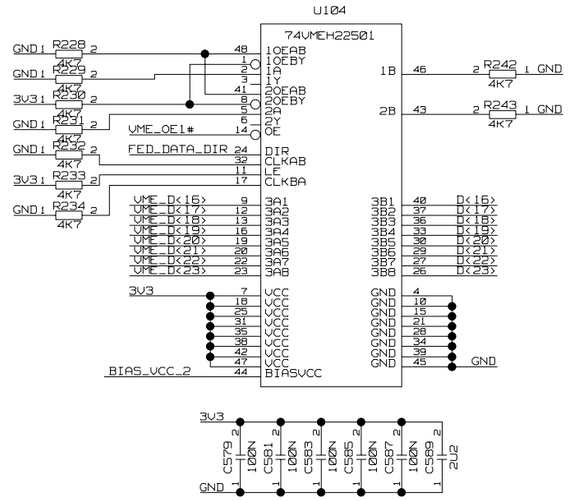

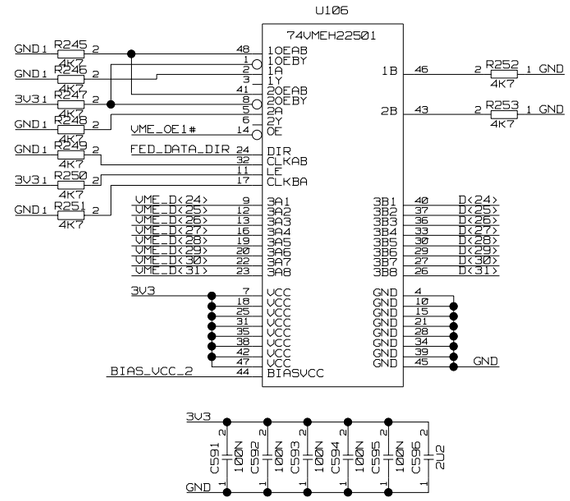

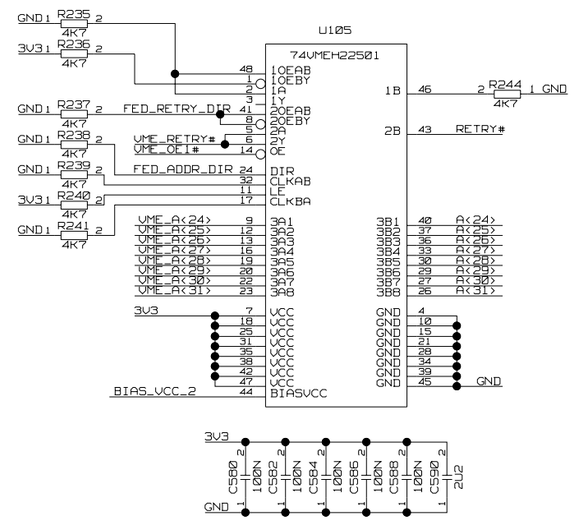

A	13-11-02	-----	S. TAGHAVIRAD	S. TAGHAVIRAD	S. TAGHAVIRAD	
ISSUE	DATE	MOD NO.	DRN BY.	CHKD.	APPD.	STATUS

USED ON CMS

© CCLRC 2002

CCLRC COUNCIL FOR THE CENTRAL LABORATORY OF THE RESEARCH COUNCILS
RUTHERFORD APPLETON LABORATORY, CHILTON, OXON OX11 0QX.

TITLE PC3205M CIRCUIT

CMS TRACKER FED v1

J2 VME INTERFACE AND PRECHARGE CIRCUIT

A 2-TE-0070-020-06-A

TOTAL NO. OF SHEETS 95

A 2 -TE-0070-020-06-A

A | 2-TE-0070-020-07-A | THIS DRAWING CONFORMS TO B.S. 3939

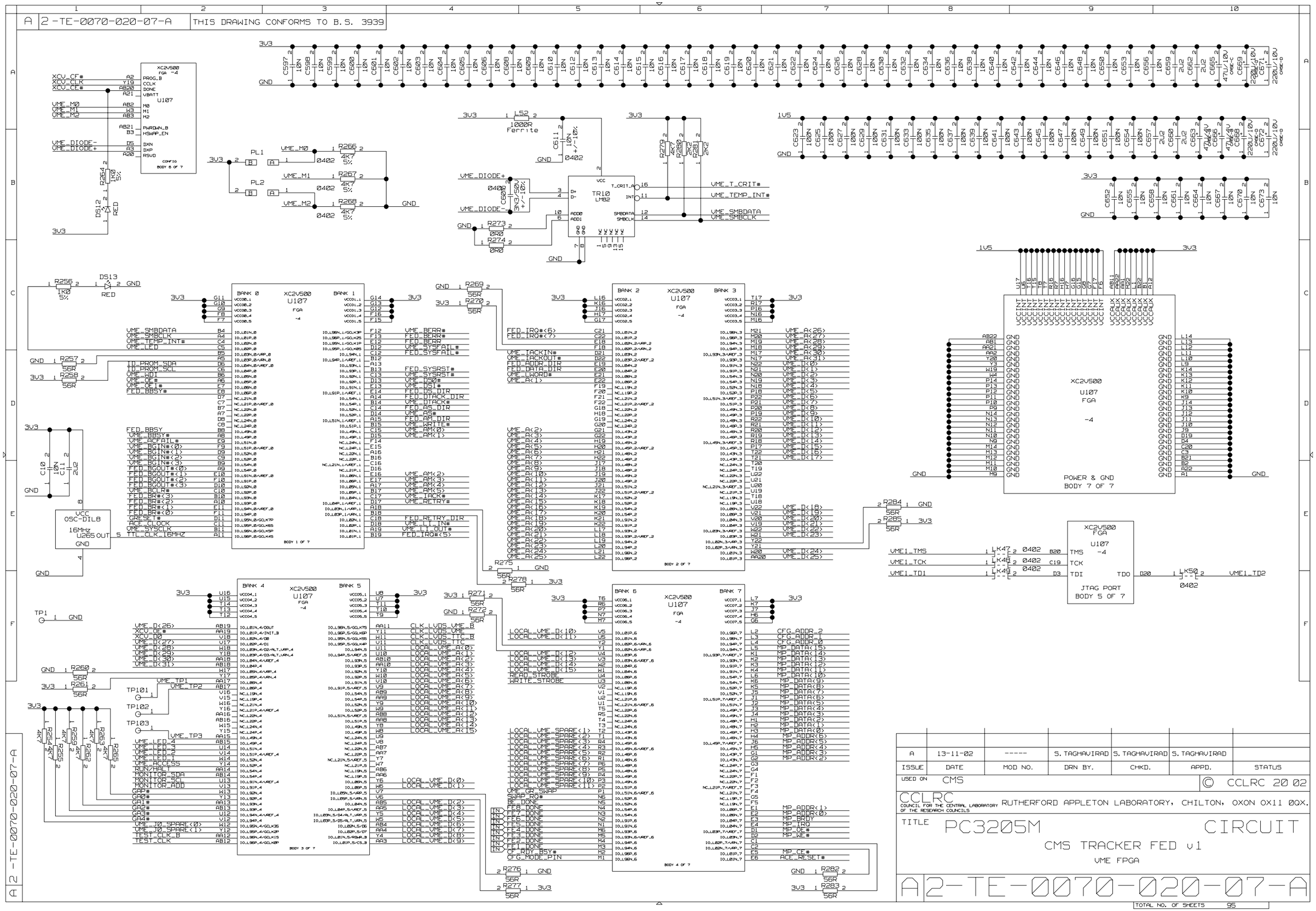

A	13-11-02	-----	S. TAGHAVIRAD	S. TAGHAVIRAD	S. TAGHAVIRAD	
ISSUE	DATE	MOD NO.	DRN BY.	CHKD.	APPD.	STATUS
USED ON	CMS				© CCLRC 20 02	

CCLRC
COUNCIL FOR THE CENTRAL LABORATORY OF THE RESEARCH COUNCILS

RUTHERFORD APPLETON LABORATORY, CHILTON, OXON OX11 0QX.

TITLE PC3205M CIRCUIT

CMS TRACKER FED v1

VME FPGA

A 2-TE-0070-020-07-A

TOTAL NO. OF SHEETS 95

A | 2-TE-0070-020-08-A | THIS DRAWING CONFORMS TO B.S. 3939

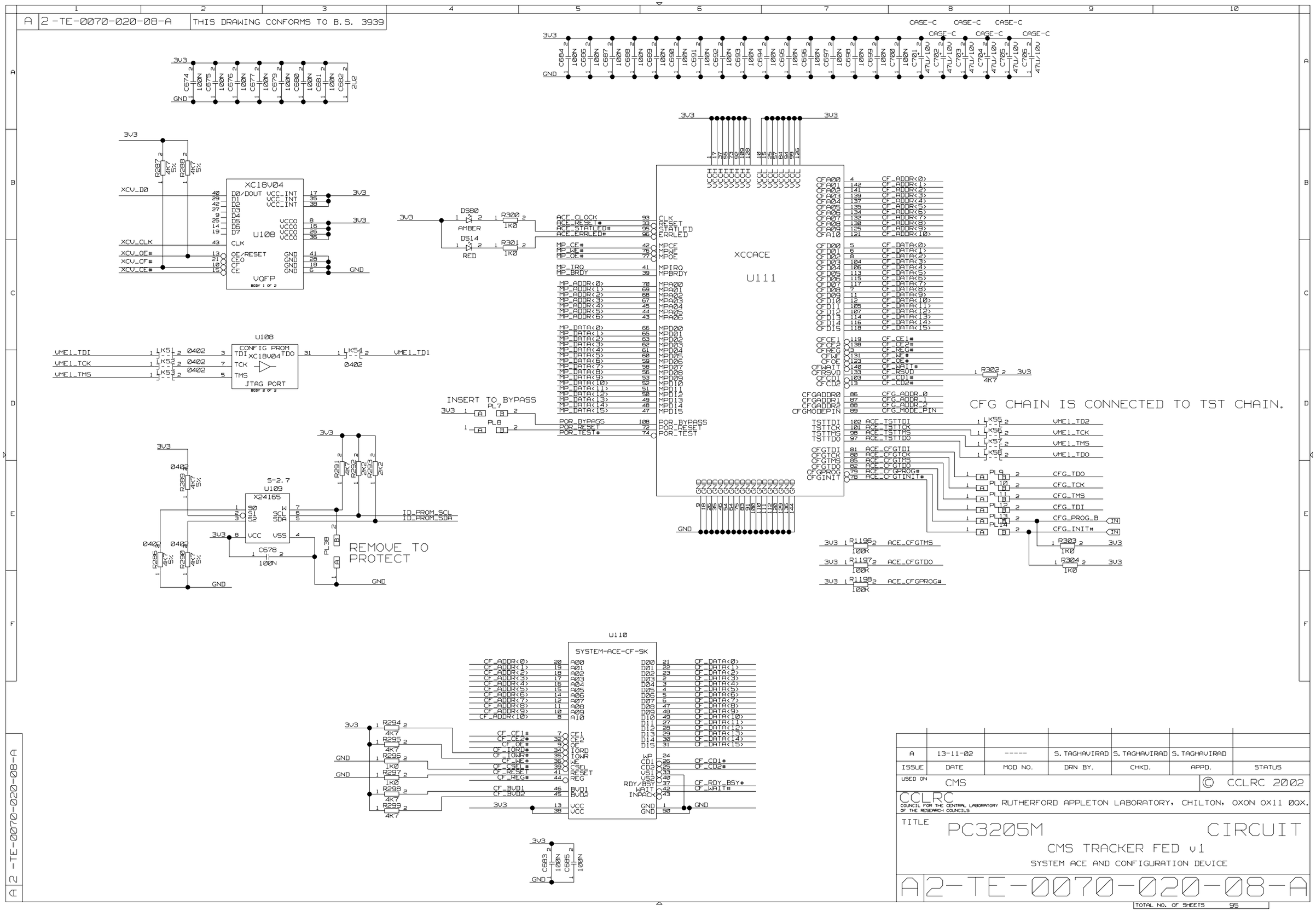

A	13-11-02	-----	S. TAGHAVIRAD	S. TAGHAVIRAD	S. TAGHAVIRAD	
ISSUE	DATE	MOD NO.	DRN BY.	CHKD.	APPD.	STATUS

USED ON CMS

© CCLRC 2002

CCLRC COUNCIL FOR THE CENTRAL LABORATORY OF THE RESEARCH COUNCILS
RUTHERFORD APPLETON LABORATORY, CHILTON, OXON OX11 0QX.

TITLE

PC3205M CIRCUIT

CMS TRACKER FED v1

SYSTEM ACE AND CONFIGURATION DEVICE

A 2-TE-0070-020-08-A

TOTAL NO. OF SHEETS 95

A 2-TE-0070-020-08-A

A | 2-TE-0070-020-09-A | THIS DRAWING CONFORMS TO B.S. 3939

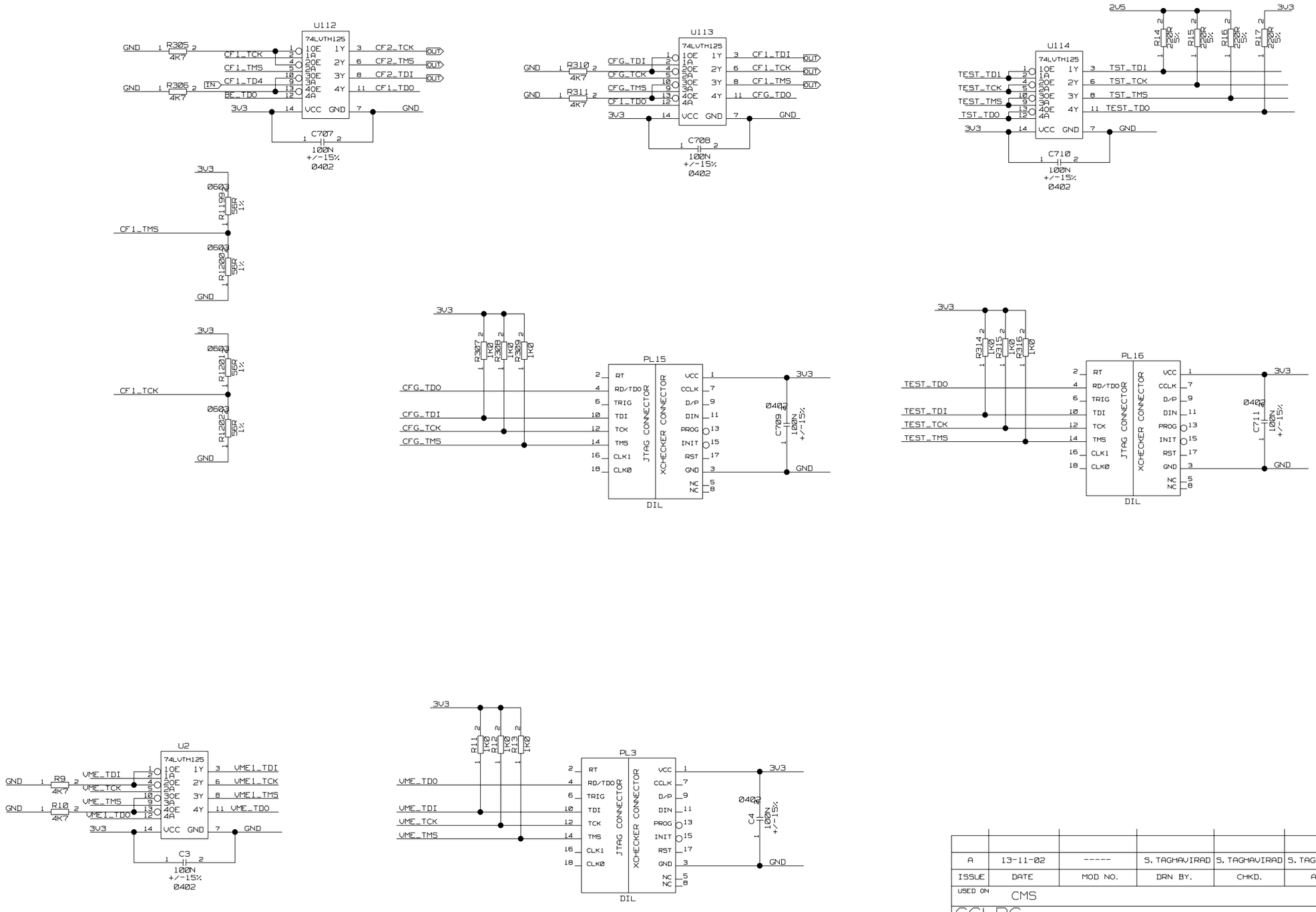

A	13-11-02	-----	S. TAGHAVIRAD	S. TAGHAVIRAD	S. TAGHAVIRAD	
ISSUE	DATE	MOD NO.	DRN BY.	CHKD.	APPD.	STATUS

USED ON CMS

© CCLRC 2002

CCLRC
COUNCIL FOR THE CENTRAL LABORATORY OF THE RESEARCH COUNCILS
RUTHERFORD APPLETON LABORATORY, CHILTON, OXON OX11 0QX.

TITLE

PC3205M CIRCUIT

CMS TRACKER FED v1

JTAG CONNECTORS AND BUFFERS

A 2-TE-0070-020-09-A

TOTAL NO. OF SHEETS 95

A 2-TE-0070-020-09-A

A | 2-TE-0070-020-10-A | THIS DRAWING CONFORMS TO B.S. 3939

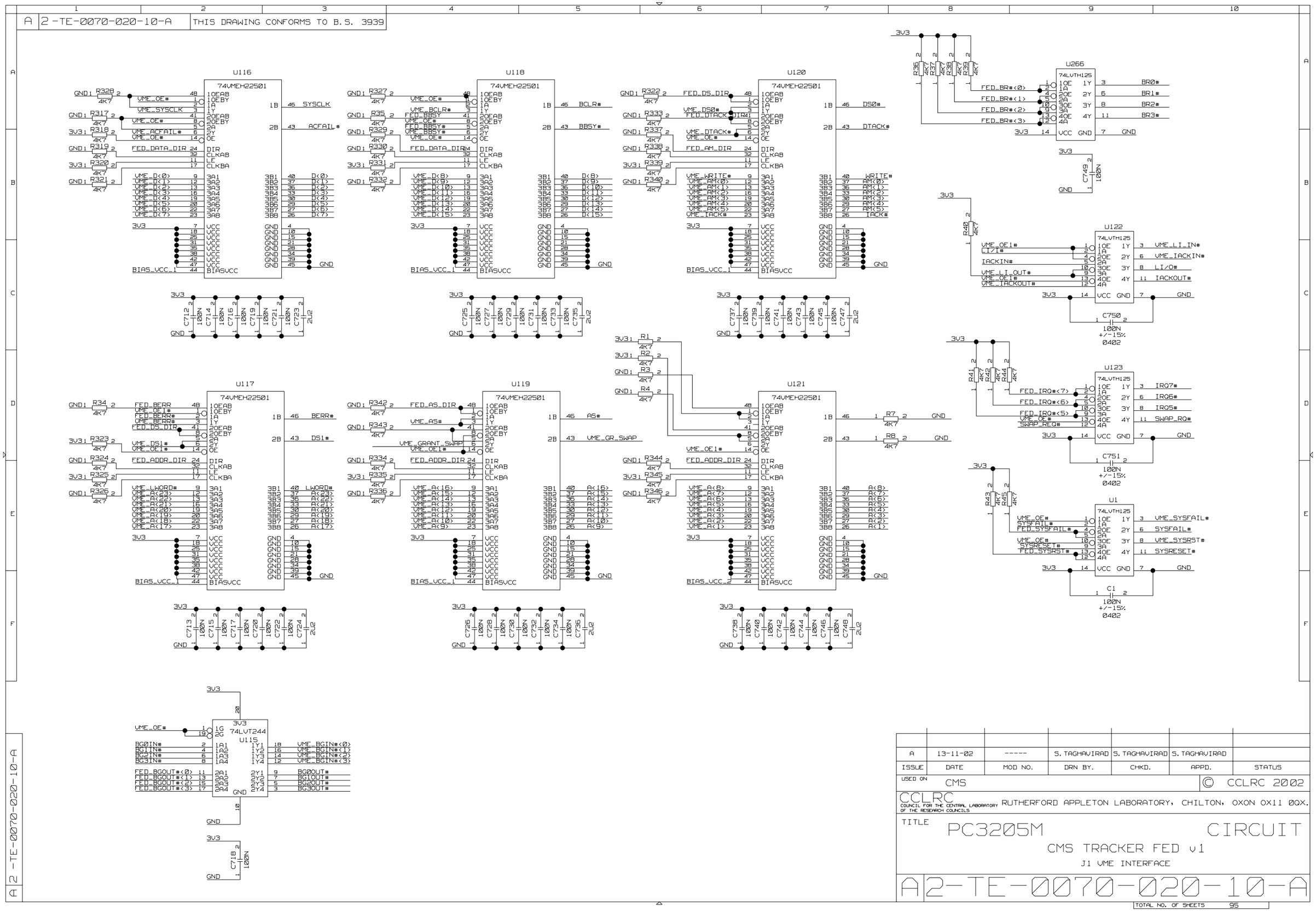

A	13-11-02	-----	S. TAGHAVIRAD	S. TAGHAVIRAD	S. TAGHAVIRAD	
ISSUE	DATE	MOD NO.	DRN BY.	CHKD.	APPD.	STATUS

USED ON CMS

© CCLRC 2002

CCLRC
COUNCIL FOR THE CENTRAL LABORATORY OF THE RESEARCH COUNCILS
RUTHERFORD APPLETON LABORATORY, CHILTON, OXON OX11 0QX.

TITLE

PC3205M CIRCUIT

CMS TRACKER FED v1

J1 VME INTERFACE

A 2-TE-0070-020-10-A

TOTAL NO. OF SHEETS 95

A 2-TE-0070-020-10-A

A	2-TE-0070-020-11-A	THIS DRAWING CONFORMS TO B.S. 3939

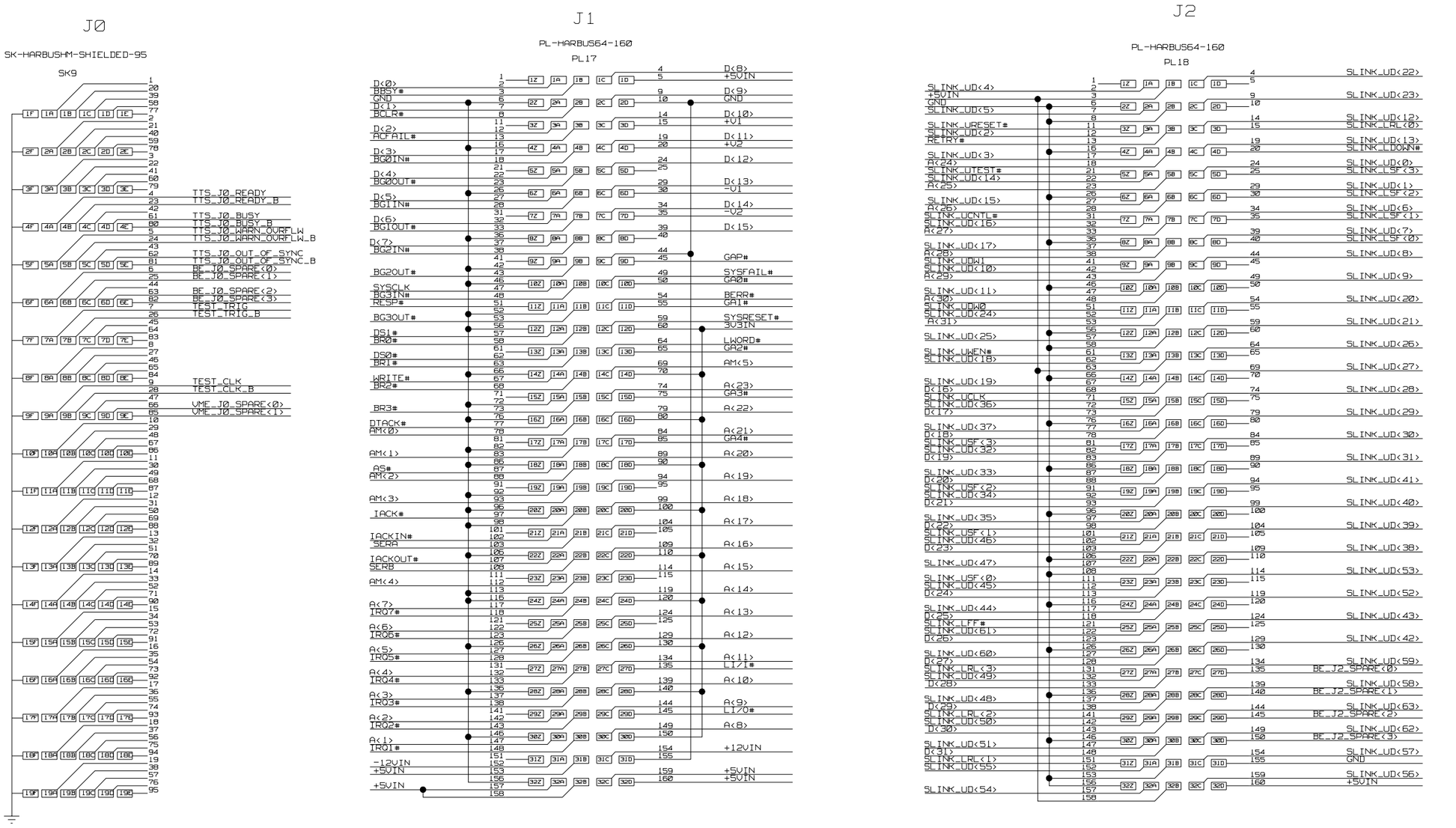

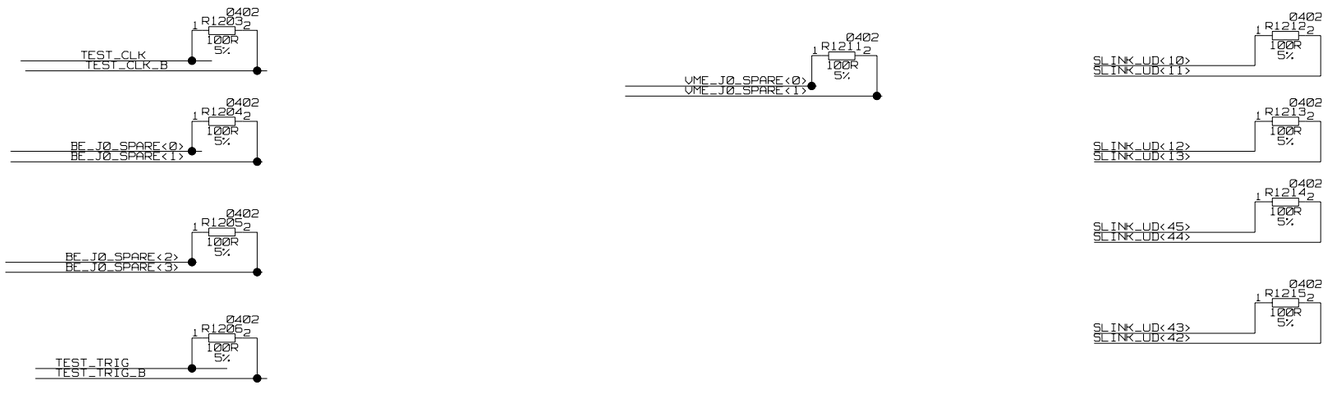

PLACE RESISTORS AT DESTINATION

ISSUE	DATE	MOD NO.	DRN BY.	CHKD.	APPD.	STATUS
A	13-11-02	-----	S. TAGHAVIRAD	S. TAGHAVIRAD	S. TAGHAVIRAD	

USED ON CMS

© CCLRC 2002

CCLRC COUNCIL FOR THE CENTRAL LABORATORY OF THE RESEARCH COUNCILS
RUTHERFORD APPLETON LABORATORY, CHILTON, OXON OX11 0QX.

TITLE PC3205M CIRCUIT

CMS TRACKER FED v1

CONNECTORS

A 2-TE-0070-020-11-A

TOTAL NO. OF SHEETS 95

A 2-TE-0070-020-11-A

A | 2-TE-0070-020-12-A | THIS DRAWING CONFORMS TO B.S. 3939

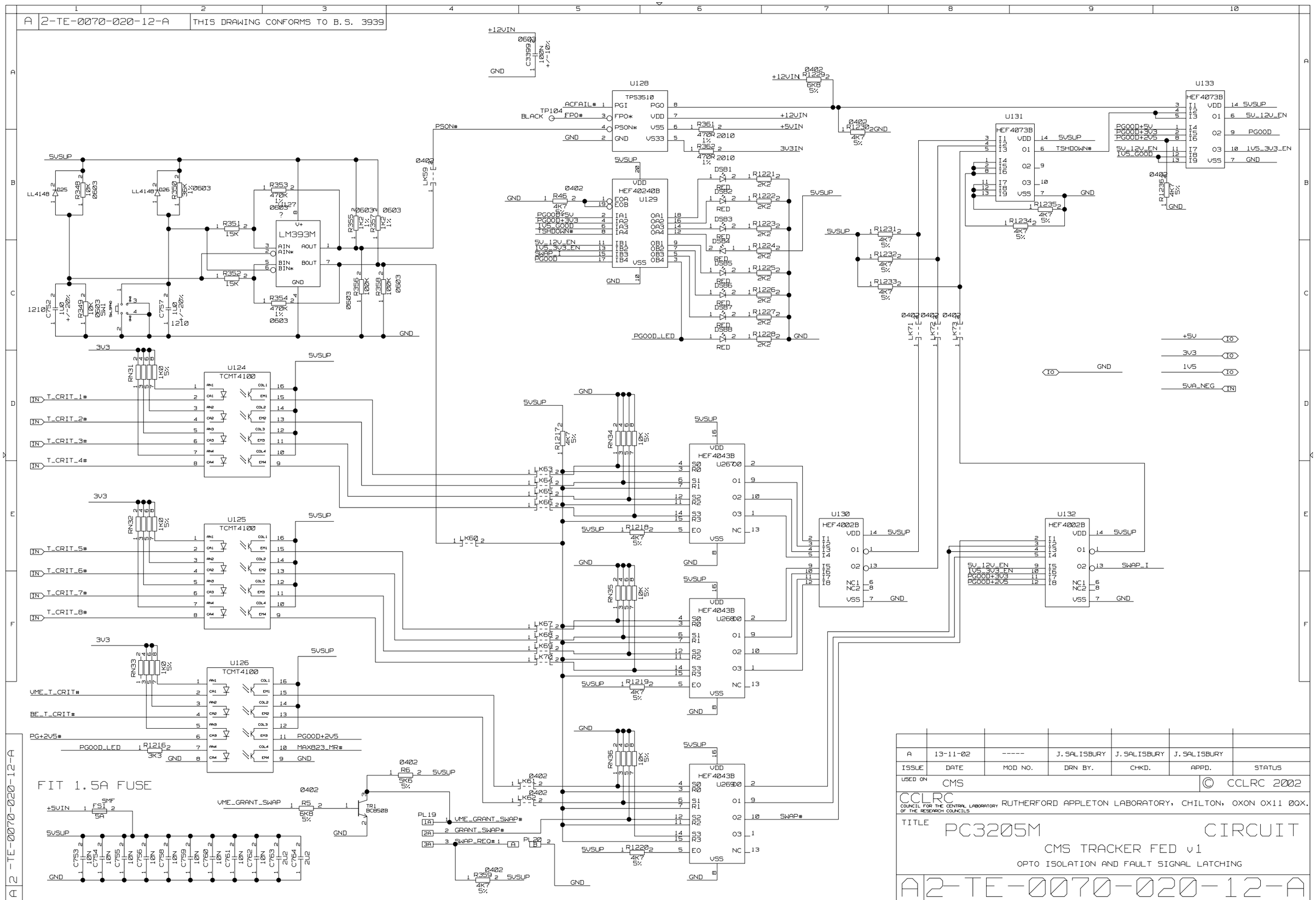

A	13-11-02	-----	J. SALISBURY	J. SALISBURY	J. SALISBURY	
ISSUE	DATE	MOD NO.	DRN BY.	CHKD.	APPD.	STATUS

USED ON CMS

© CCLRC 2002

CCLRC
COUNCIL FOR THE CENTRAL LABORATORY OF THE RESEARCH COUNCILS
RUTHERFORD APPLETON LABORATORY, CHILTON, OXON OX11 0QX.

TITLE

PC3205M CIRCUIT

CMS TRACKER FED v1

OPTO ISOLATION AND FAULT SIGNAL LATCHING

A 2-TE-0070-020-12-A

TOTAL NO. OF SHEETS 95

A 2-TE-0070-020-12-A

A | 2-TE-0070-020-13-A | THIS DRAWING CONFORMS TO B.S. 3939

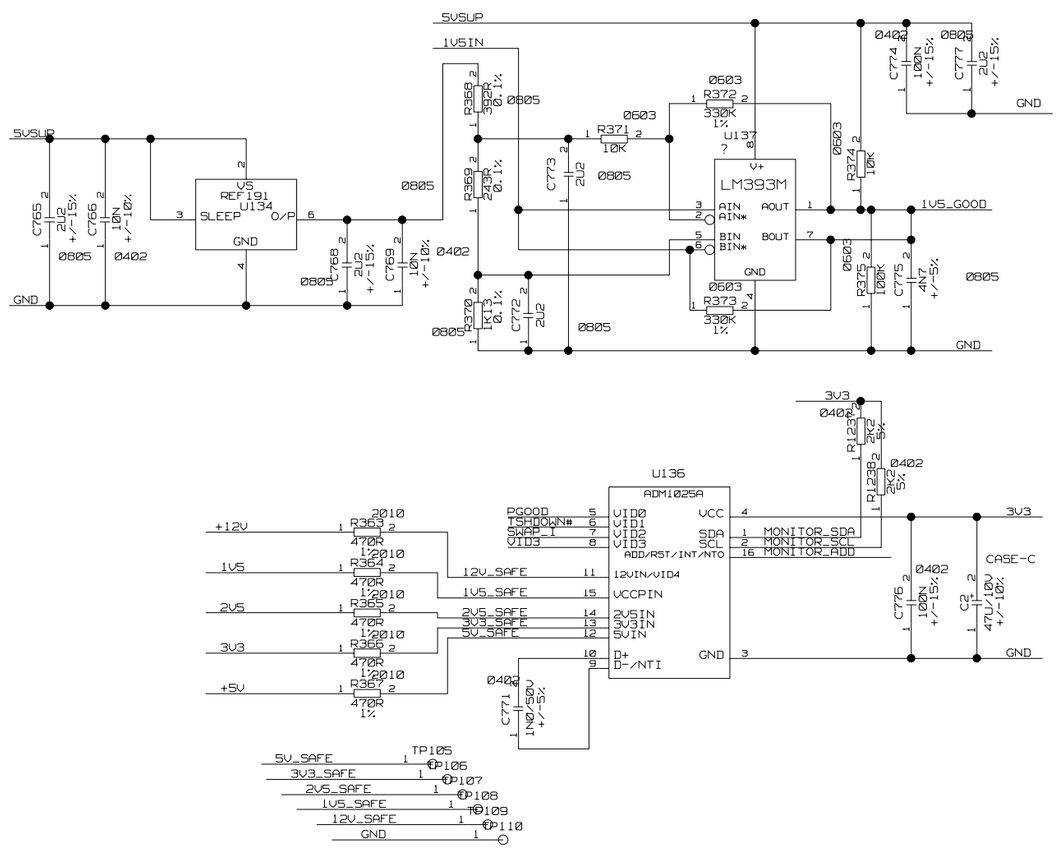

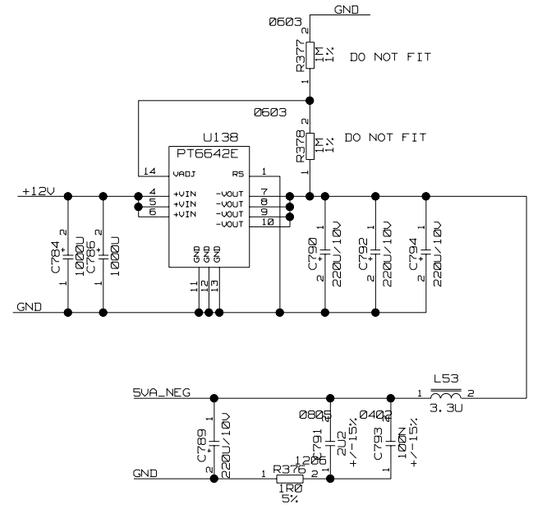

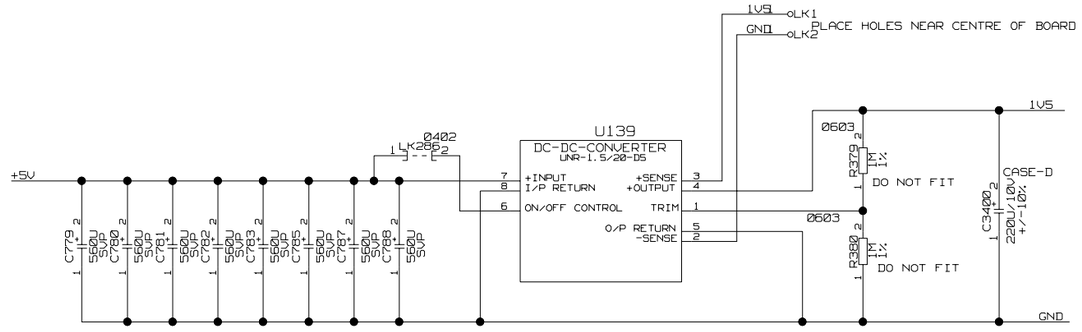

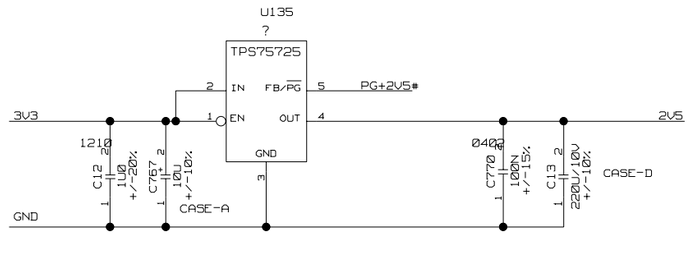

TPS75725 IS CONDITIONALLY STABLE
CONSULT DATA SHEET BEFORE CHANGING CAPACITORS

ISSUE	DATE	MOD NO.	DRN BY.	CHKD.	APPD.	STATUS
A	13-11-02	-----	J. SALISBURY	J. SALISBURY	J. SALISBURY	

USED ON CMS

© CCLRC 2002

CCLRC
COUNCIL FOR THE CENTRAL LABORATORY OF THE RESEARCH COUNCILS
RUTHERFORD APPLETON LABORATORY, CHILTON, OXON OX11 0QX.

TITLE

PC3205M CIRCUIT

CMS TRACKER FED v1

DC-DC CONVERTORS AND MONITORING

A 2-TE-0070-020-13-A

TOTAL NO. OF SHEETS 95

A 2-TE-0070-020-13-A

A | 2-TE-0070-020-14-A | THIS DRAWING CONFORMS TO B.S. 3939

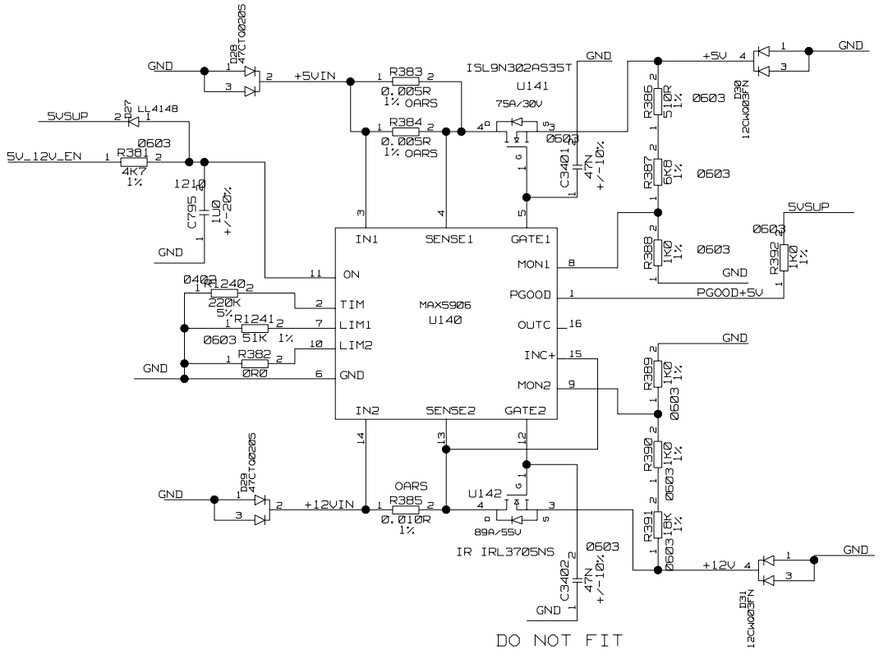

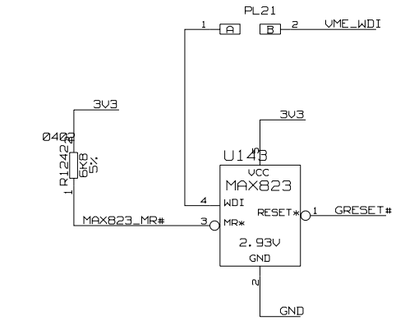

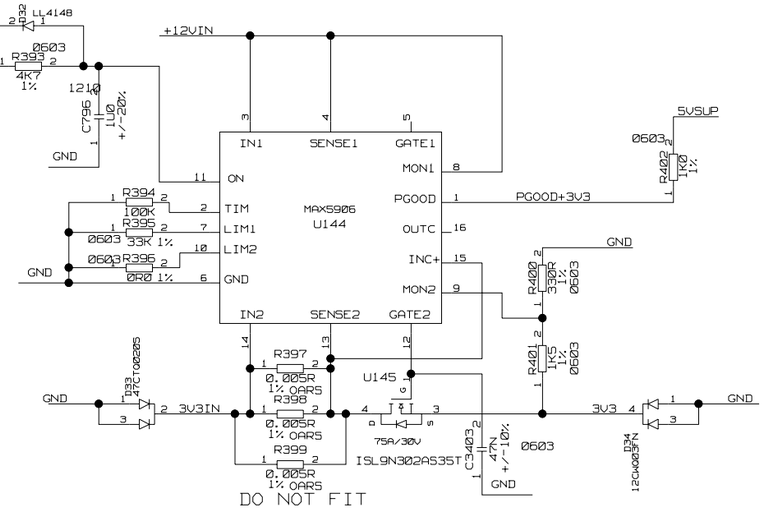

A	13-11-02	-----	J.SALISBURY	J.SALISBURY	J.SALISBURY	
ISSUE	DATE	MOD NO.	DRN BY.	CHKD.	APPD.	STATUS

USED ON CMS

© CCLRC 2002

CCLRC
COUNCIL FOR THE CENTRAL LABORATORY OF THE RESEARCH COUNCILS
RUTHERFORD APPLETON LABORATORY, CHILTON, OXON OX11 0QX.

TITLE

PC3205M CIRCUIT

CMS TRACKER FED v1

ELECTRONIC POWER SUPPLY PROTECTION

A 2-TE-0070-020-14-A

TOTAL NO. OF SHEETS 95

A 2-TE-0070-020-14-A

A | 2 -TE-0070-020-15-A | THIS DRAWING CONFORMS TO B.S. 3939

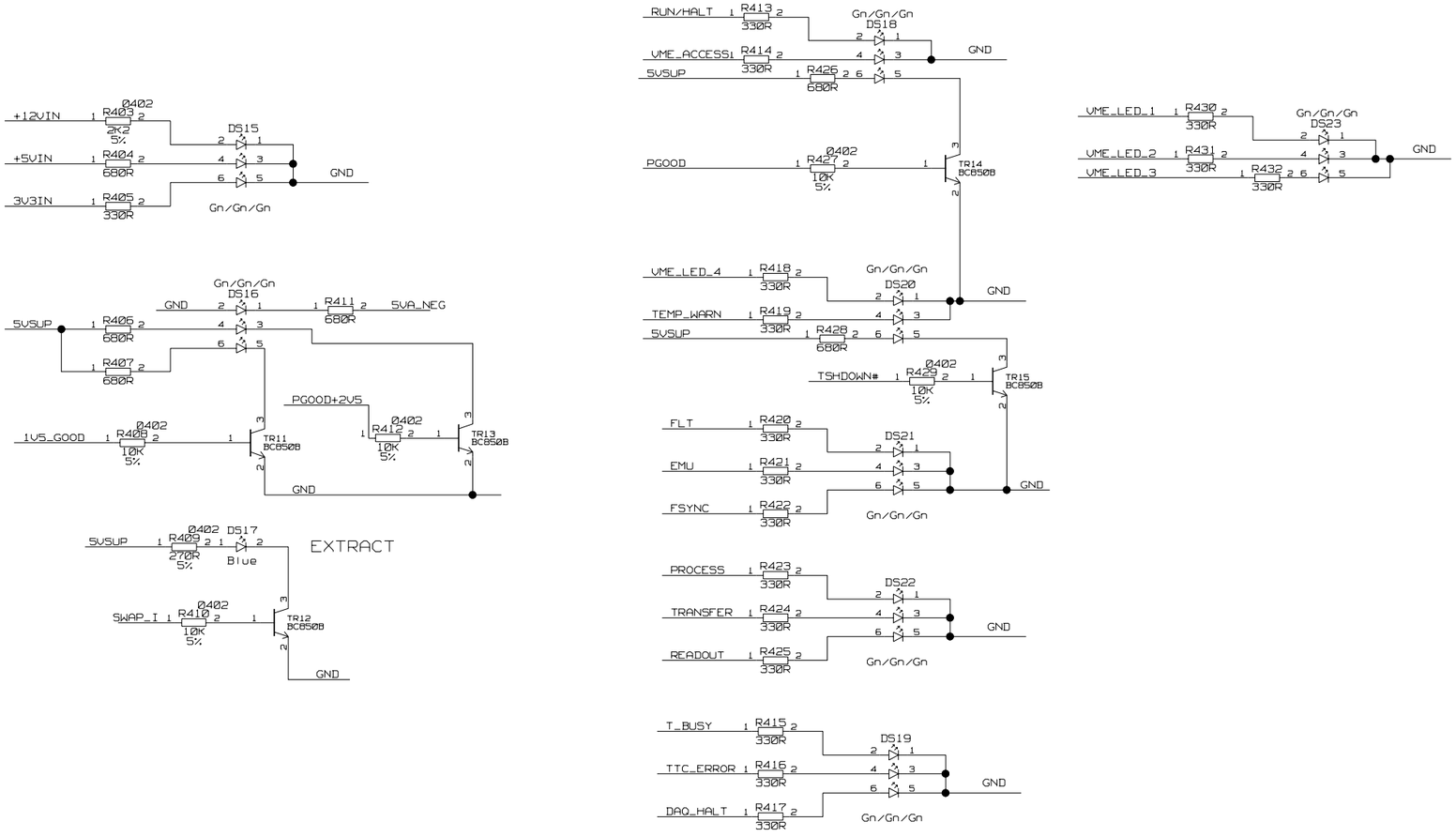

A	13-11-02	-----	J.SALISBURY	J.SALISBURY	J.SALISBURY	
ISSUE	DATE	MOD NO.	DRN BY.	CHKD.	APPD.	STATUS

USED ON CMS

© CCLRC 2002

CCLRC COUNCIL FOR THE CENTRAL LABORATORY OF THE RESEARCH COUNCILS RUTHERFORD APPLETON LABORATORY, CHILTON, OXON OX11 0QX.

TITLE PC3205M CIRCUIT

CMS TRACKER FED v1

FRONT PANEL DISPLAY

A 2-TE-0070-020-15-A

TOTAL NO. OF SHEETS 95

A 2 -TE-0070-020-15-A