A | 2-TE-0070-020-01-C | THIS DRAWING CONFORMS TO B.S. 3939

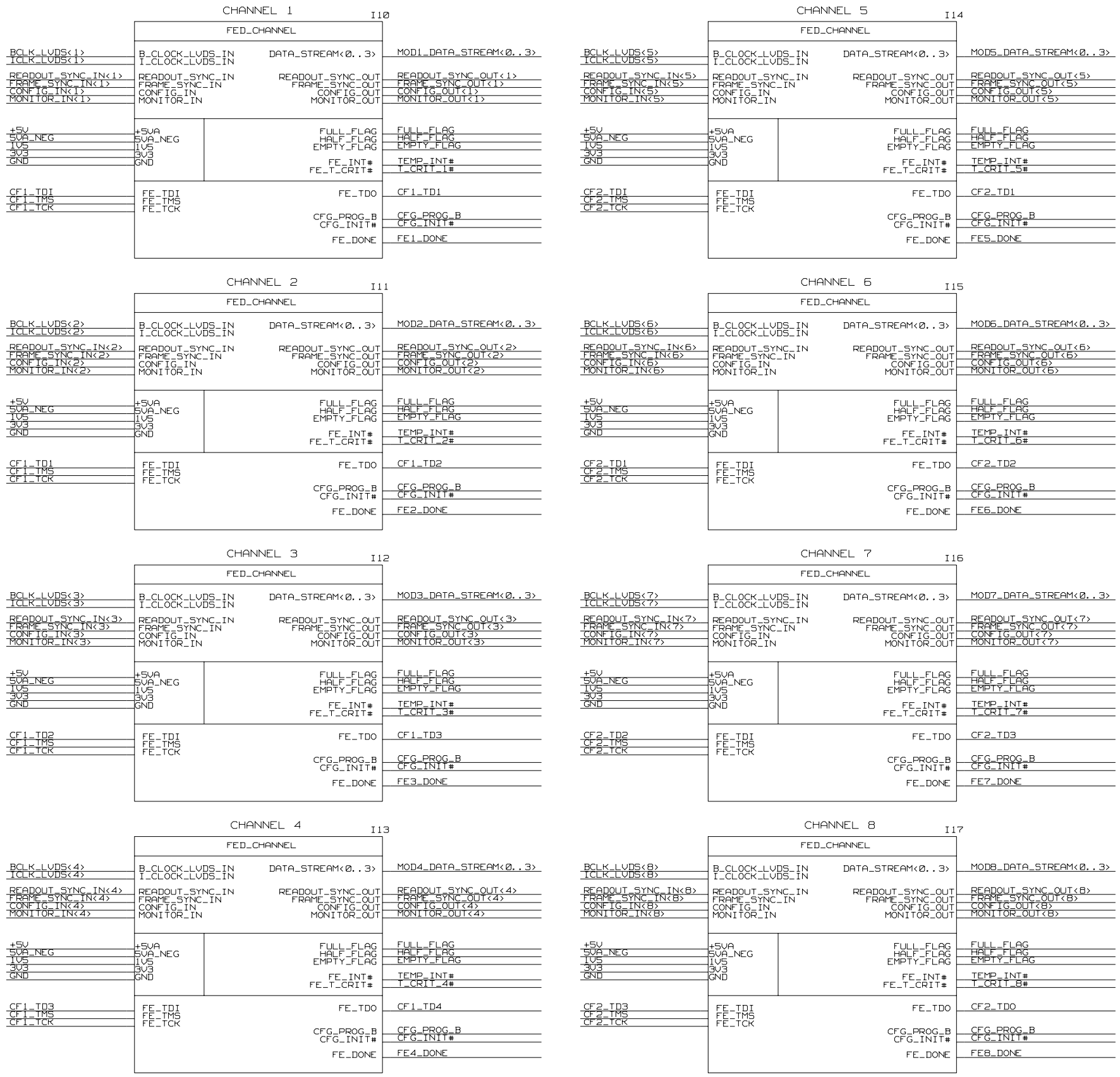

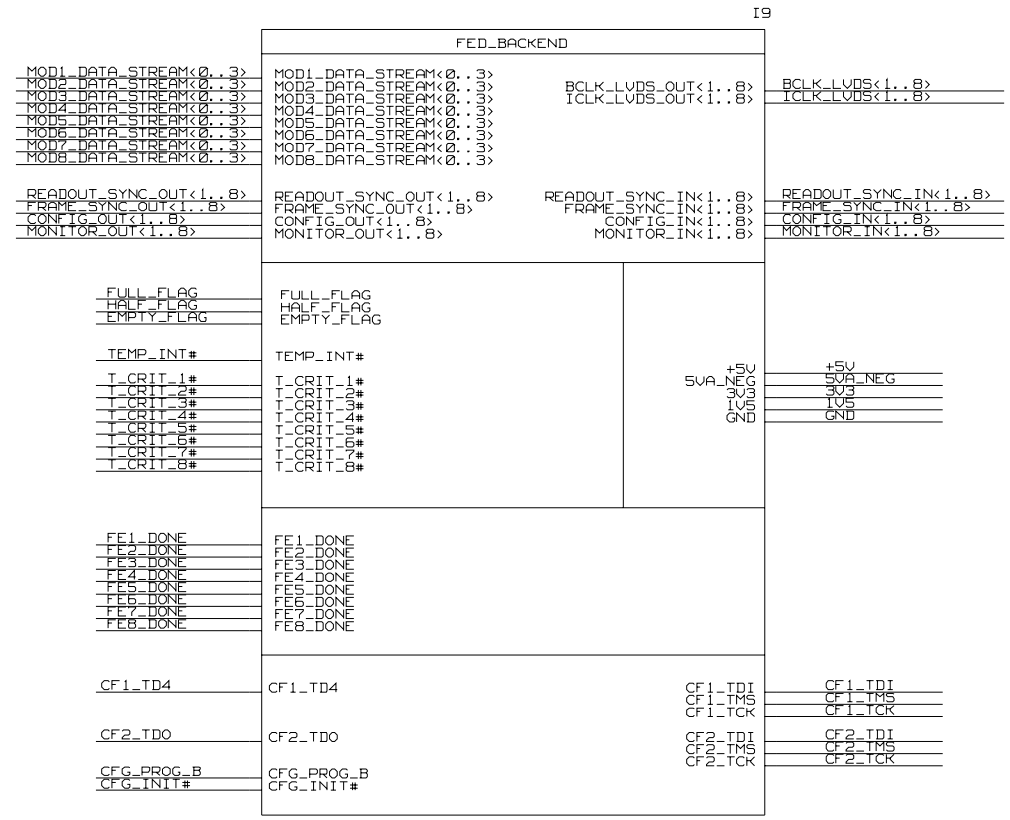

C	01-06-05	TE270	D. J. BALLARD	I. CHURCH	J. COUGHLAN	
B	11-06-04	TE243	S. TAGHAVI	J. COUGHLAN	J. COUGHLAN	
A	13-11-02	-----	S. TAGHAVIRAD	S. TAGHAVIRAD	S. TAGHAVIRAD	
ISSUE	DATE	MOD NO.	DRN BY.	CHKD.	APPD.	STATUS

USED ON CMS

© CCLRC 2002

CCLRC COUNCIL FOR THE CENTRAL LABORATORY OF THE RESEARCH COUNCILS
RUTHERFORD APPLETON LABORATORY, CHILTON, OXON OX11 0QX.

TITLE

PC3205M CIRCUIT

CMS TRACKER FED

TOP LEVEL

A 2-TE-0070-020-01-C

TOTAL NO. OF SHEETS 95

A 2-TE-0070-020-01-C

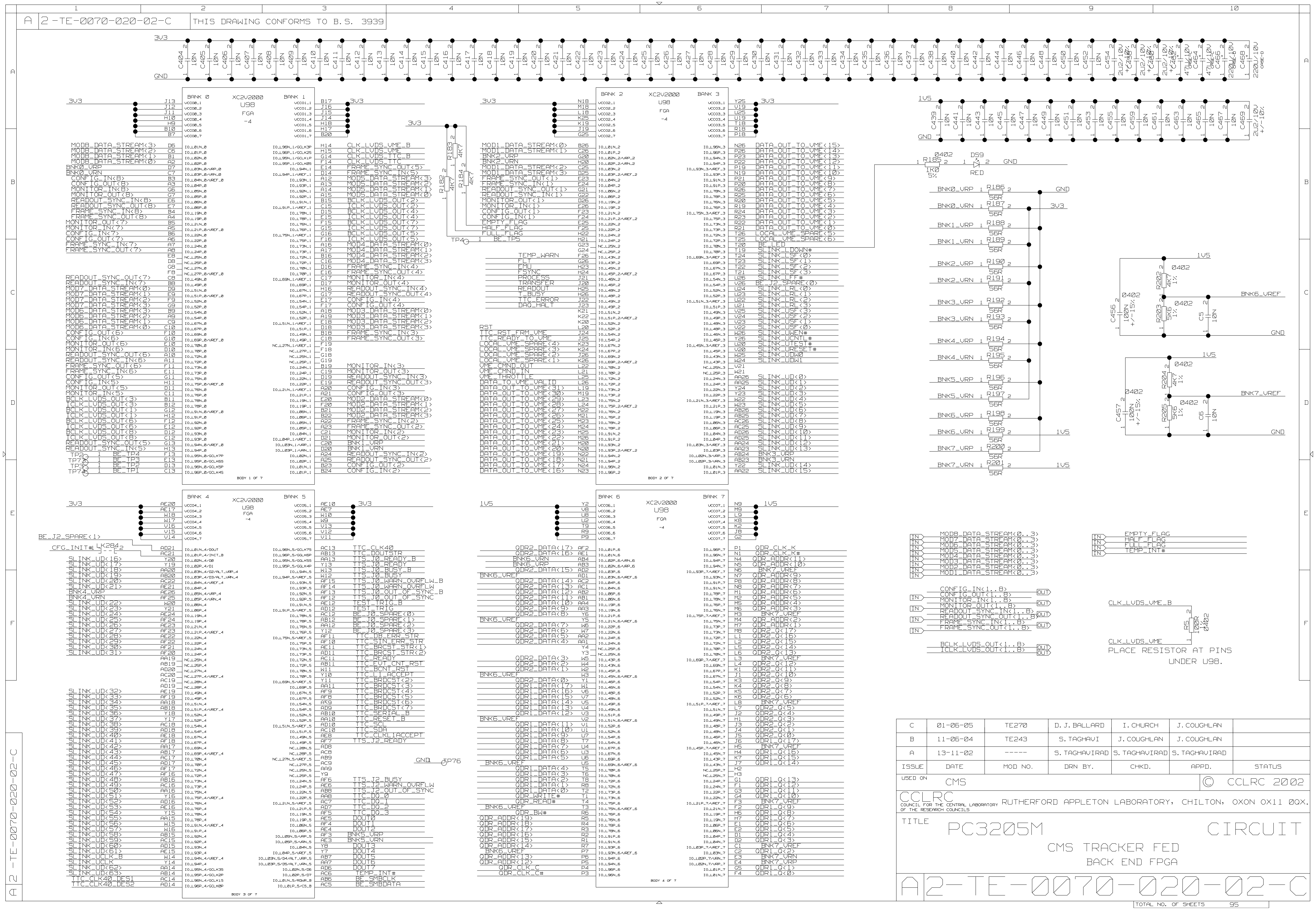

C	01-06-05	TE270	D. J. BALLARD	I. CHURCH	J. COUGHLAN	
B	11-06-04	TE243	S. TAGHAVI	J. COUGHLAN	J. COUGHLAN	
A	13-11-02	-----	S. TAGHAVIRAD	S. TAGHAVIRAD	S. TAGHAVIRAD	
ISSUE	DATE	MOD NO.	DRN BY.	CHKD.	APPD.	STATUS

USED ON CMS

© CCLRC 2002

CCLRC COUNCIL FOR THE CENTRAL LABORATORY OF THE RESEARCH COUNCILS RUTHERFORD APPLETON LABORATORY, CHILTON, OXON OX11 0QX.

TITLE PC3205M CIRCUIT

CMS TRACKER FED
BACK END FPGA

A2-TE-0070-020-02-C

TOTAL NO. OF SHEETS 95

A 2-TE-0070-020-02-C THIS DRAWING CONFORMS TO B.S. 3939

A | 2-TE-0070-020-03-C | THIS DRAWING CONFORMS TO B.S. 3939

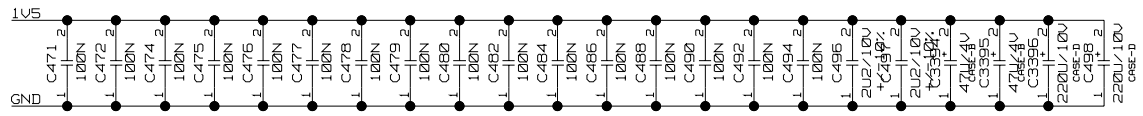

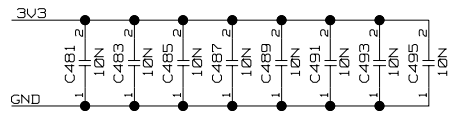

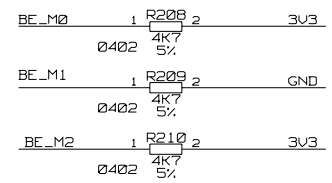

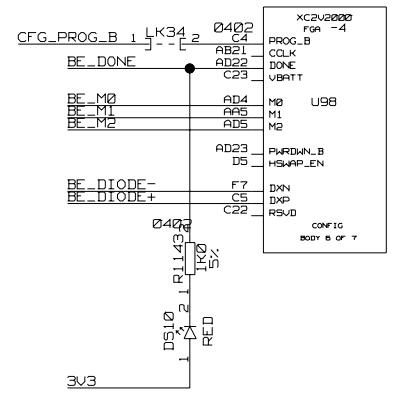

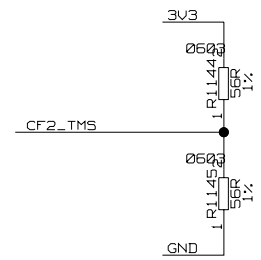

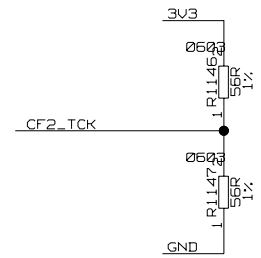

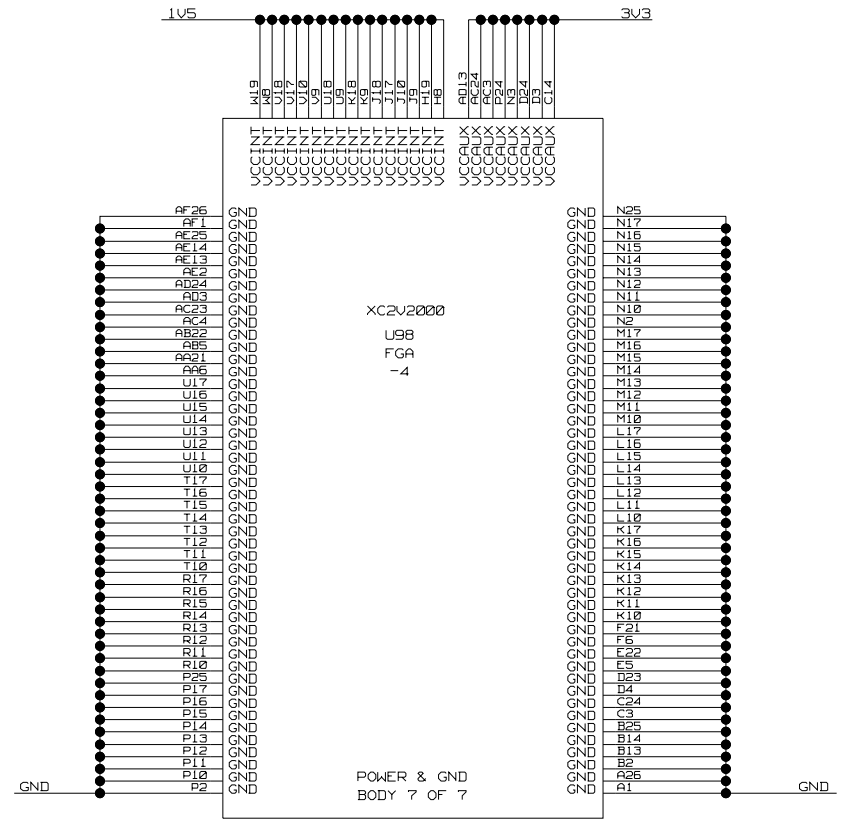

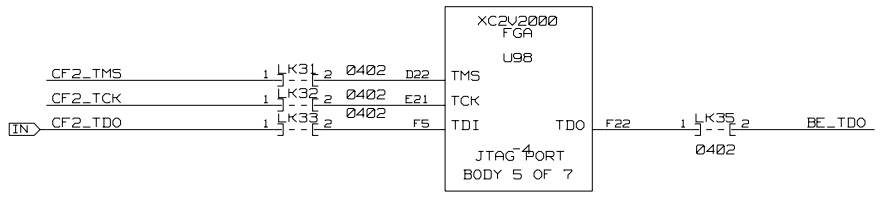

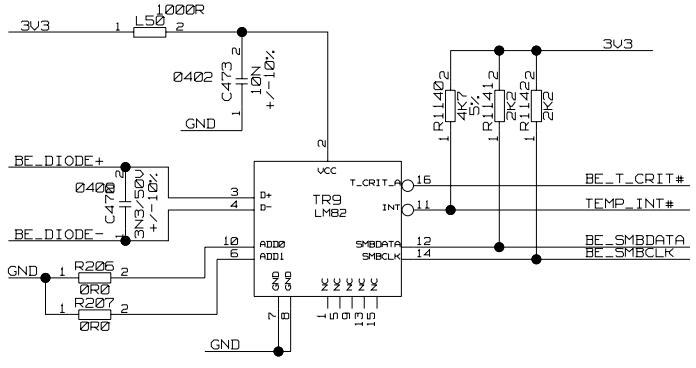

C	01-06-05	TE270	D.J. BALLARD	I. CHURCH	J. COUGHLAN	
B	11-06-04	TE243	S. TAGHAVI	J. COUGHLAN	J. COUGHLAN	
A	13-11-02	-----	S. TAGHAVIRAD	S. TAGHAVIRAD	S. TAGHAVIRAD	
ISSUE	DATE	MOD NO.	DRN BY.	CHKD.	APPD.	STATUS

USED ON CMS

© CCLRC 2002

CCLRC COUNCIL FOR THE CENTRAL LABORATORY OF THE RESEARCH COUNCILS — RUTHERFORD APPLETON LABORATORY, CHILTON, OXON OX11 0QX.

TITLE PC3205M CIRCUIT

CMS TRACKER FED
BACK END FPGA

A 2-TE-0070-020-03-C

TOTAL NO. OF SHEETS 95

A 2-TE-0070-020-03-C

A 2-TE-0070-020-04-C THIS DRAWING CONFORMS TO B.S. 3939

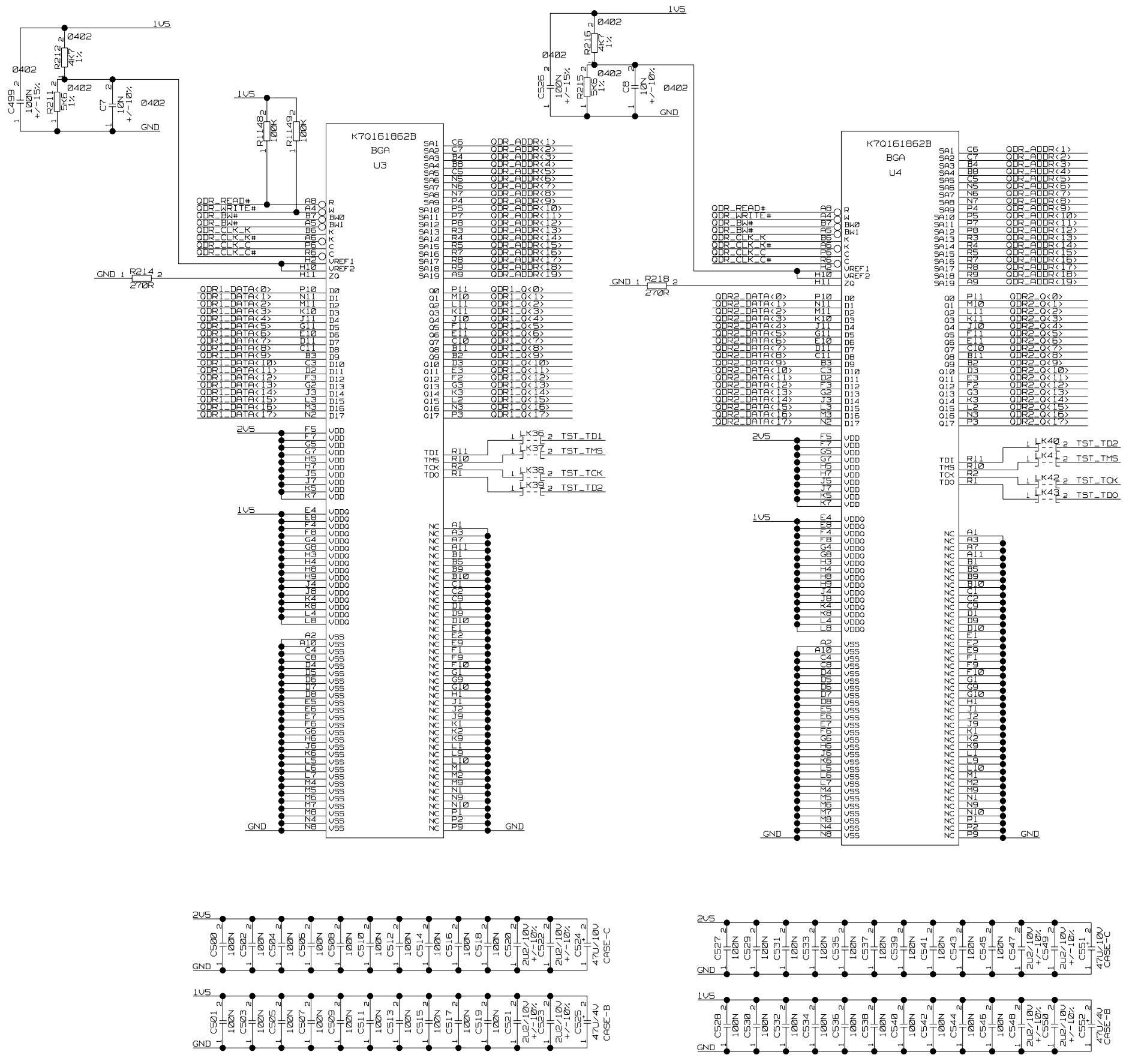

C	01-06-05	TE270	D. J. BALLARD	I. CHURCH	J. COUGHLAN	
B	11-06-04	TE243	S. TAGHAVI	J. COUGHLAN	J. COUGHLAN	
A	13-11-02	-----	S. TAGHAVIRAD	S. TAGHAVIRAD	S. TAGHAVIRAD	
ISSUE	DATE	MOD NO.	DRN BY.	CHKD.	APPD.	STATUS

USED ON CMS

© CCLRC 2002

CCLRC COUNCIL FOR THE CENTRAL LABORATORY OF THE RESEARCH COUNCILS

RUTHERFORD APPLETON LABORATORY, CHILTON, OXON OX11 0QX.

TITLE

PC3205M CIRCUIT

CMS TRACKER FED

QDR MEMORY

A 2-TE-0070-020-04-C

TOTAL NO. OF SHEETS 95

A 2-TE-0070-020-04-C

A 2 -TE-0070-020-05-C THIS DRAWING CONFORMS TO B.S. 3939

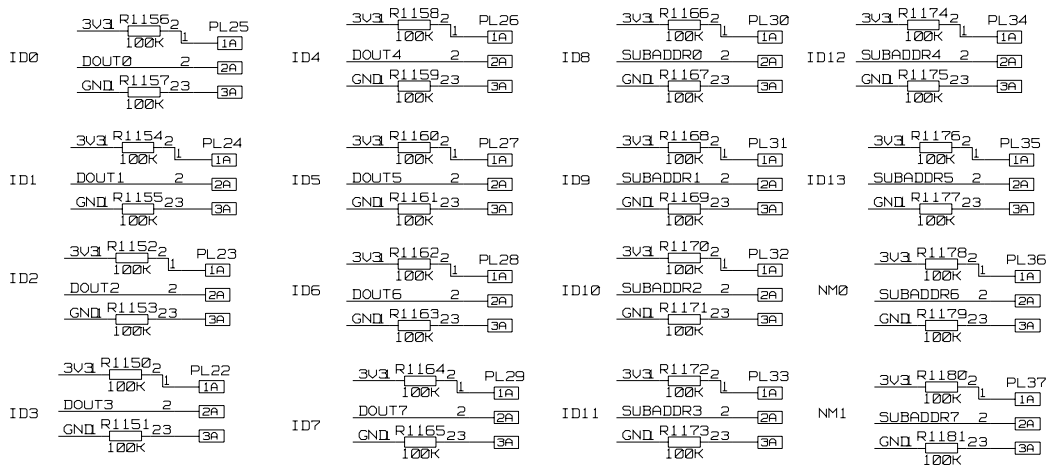

NM0 AND NM1 SHOULD BE SET TO GND
FOR NORMAL OPERATION

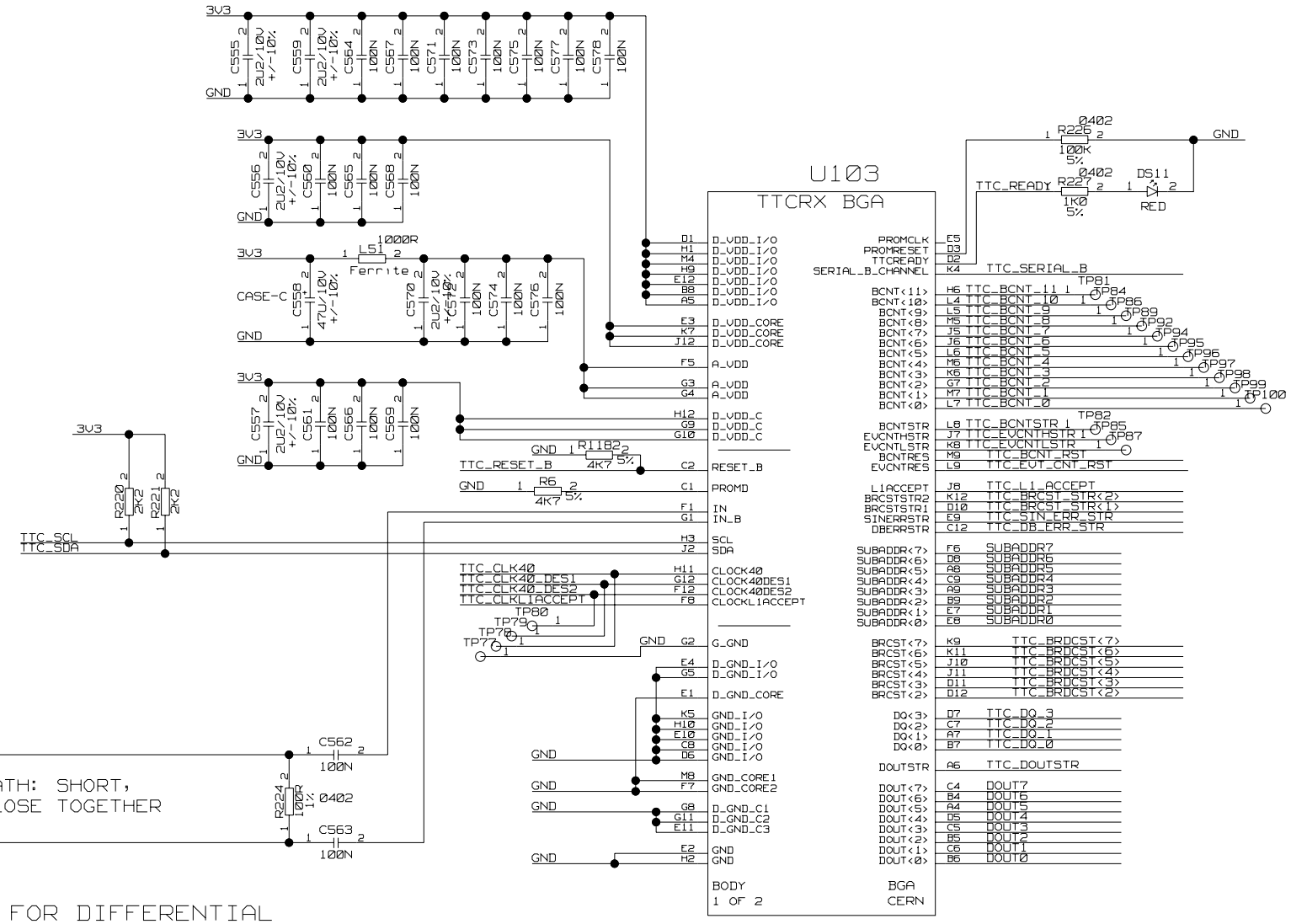

CONNECT NC PINS TO GND

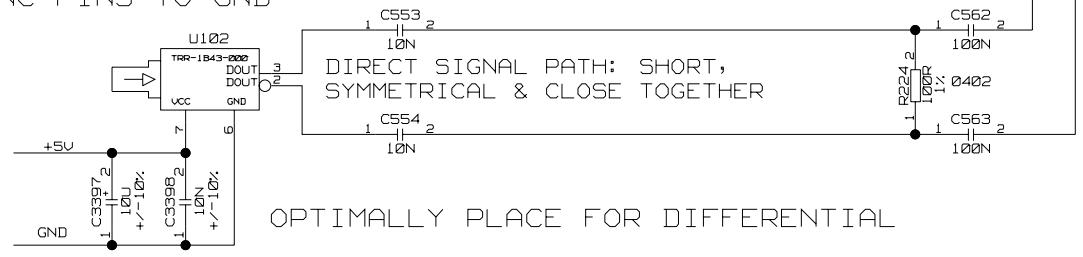

OPTIMALLY PLACE FOR DIFFERENTIAL

DO NOT FIT

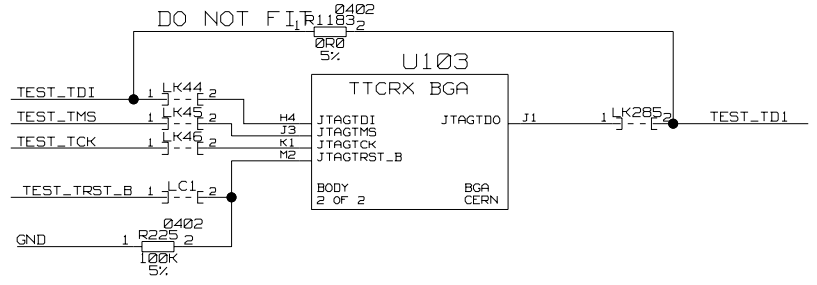

C	01-06-05	TE270	D. J. BALLARD	I. CHURCH	J. COUGHLAN	
B	11-06-04	TE243	S. TAGHAVI	J. COUGHLAN	J. COUGHLAN	
A	13-11-02	-----	S. TAGHAVIRAD	S. TAGHAVIRAD	S. TAGHAVIRAD	
ISSUE	DATE	MOD NO.	DRN BY.	CHKD.	APPD.	STATUS

USED ON CMS

© CCLRC 2002

CCLRC
COUNCIL FOR THE CENTRAL LABORATORY OF THE RESEARCH COUNCILS
RUTHERFORD APPLETON LABORATORY, CHILTON, OXON OX11 0QX.

TITLE
PC3205M CIRCUIT

CMS TRACKER FED
TTC RECEIVER AND PIN DIODE CONNECTOR

A 2-TE-0070-020-05-C

TOTAL NO. OF SHEETS 95

A 2 -TE-0070-020-05-C

A | 2-TE-0070-020-06-C | THIS DRAWING CONFORMS TO B.S. 3939

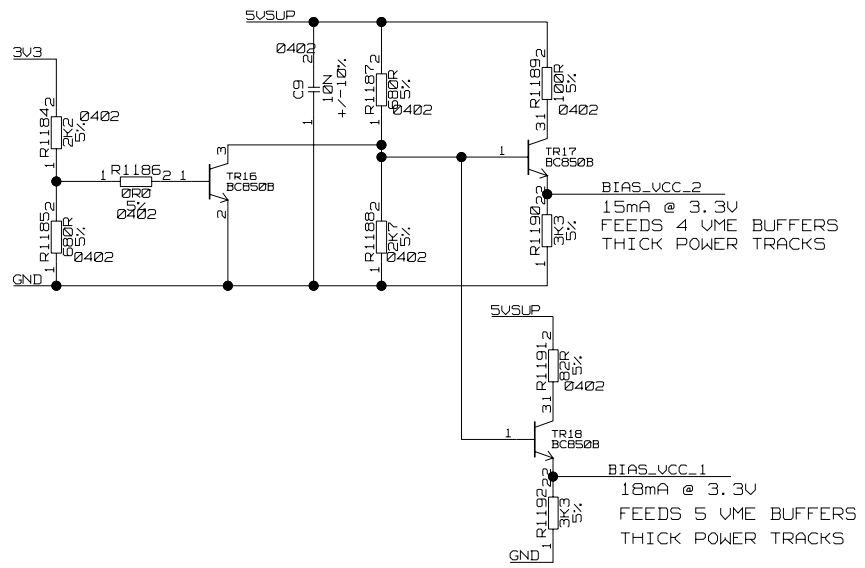

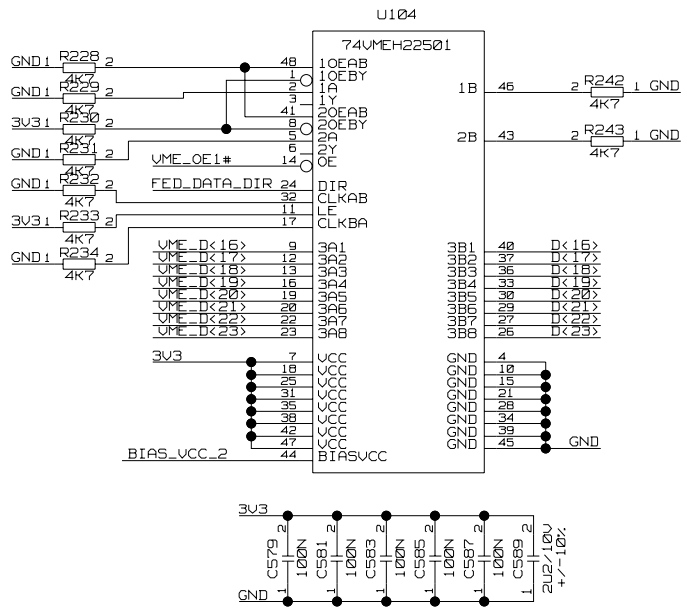

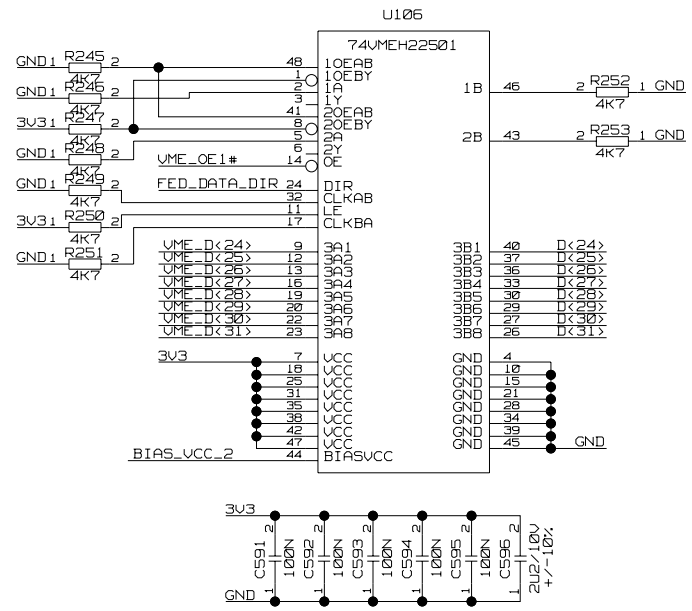

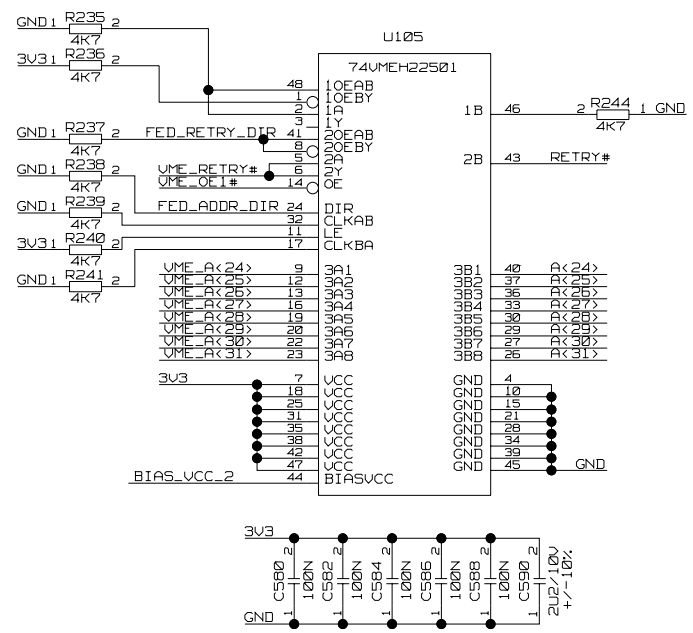

C	01-06-05	TE270	D. J. BALLARD	I. CHURCH	J. COUGHLAN	
B	11-06-04	TE243	S. TAGHAVI	J. COUGHLAN	J. COUGHLAN	
A	13-11-02	-----	S. TAGHAVIRAD	S. TAGHAVIRAD	S. TAGHAVIRAD	
ISSUE	DATE	MOD NO.	DRN BY.	CHKD.	APPD.	STATUS

USED ON CMS

© CCLRC 2002

CCLRC COUNCIL FOR THE CENTRAL LABORATORY OF THE RESEARCH COUNCILS
RUTHERFORD APPLETON LABORATORY, CHILTON, OXON OX11 0QX.

TITLE PC3205M CIRCUIT

CMS TRACKER FED

J2 VME INTERFACE AND PRECHARGE CIRCUIT

A 2-TE-0070-020-06-C

TOTAL NO. OF SHEETS 95

A 2-TE-0070-020-06-C

A | 2-TE-0070-020-07-C | THIS DRAWING CONFORMS TO B.S. 3939

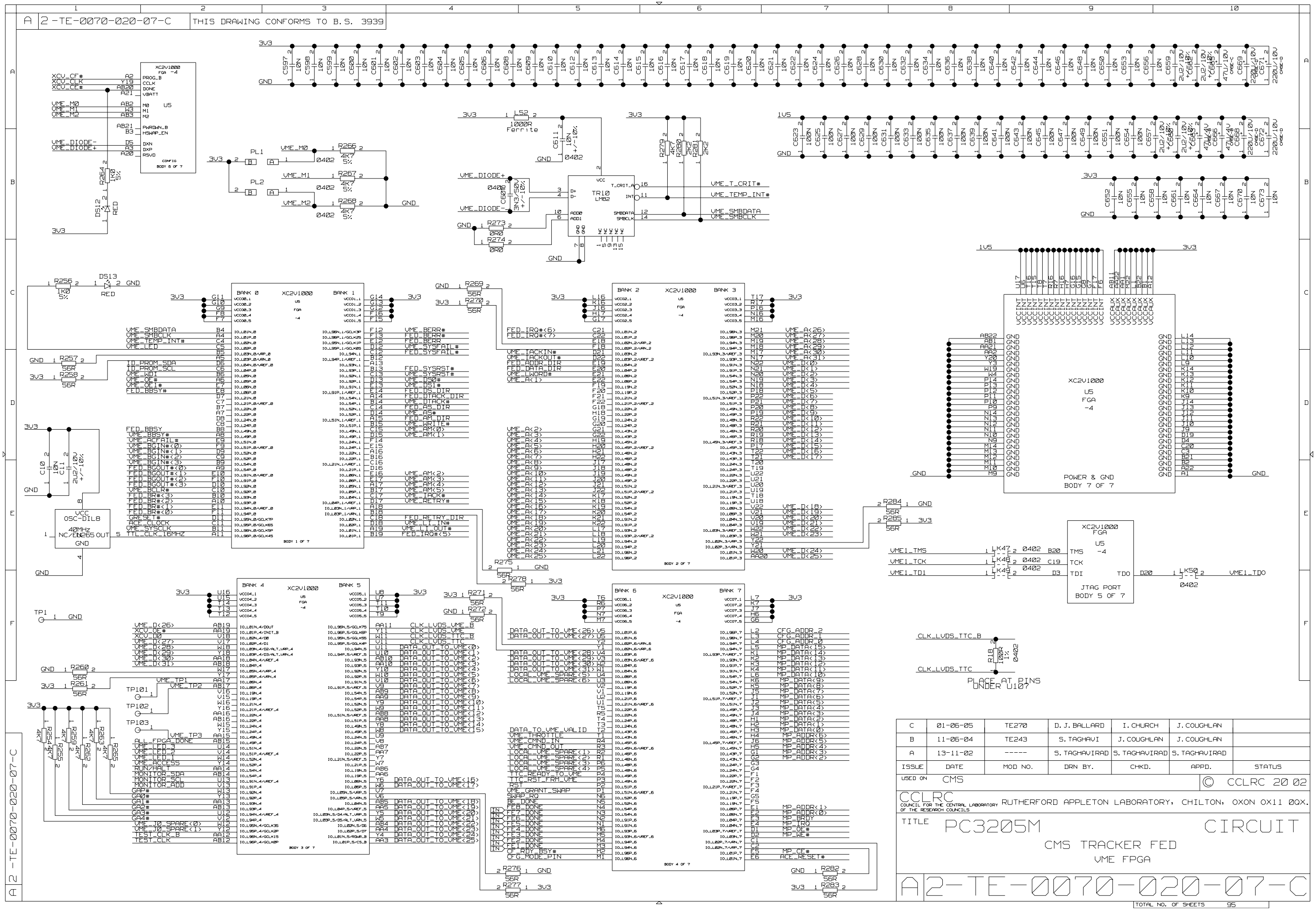

C	01-06-05	TE270	D. J. BALLARD	I. CHURCH	J. COUGHLAN	
B	11-06-04	TE243	S. TAGHAVI	J. COUGHLAN	J. COUGHLAN	
A	13-11-02	-----	S. TAGHAVIRAD	S. TAGHAVIRAD	S. TAGHAVIRAD	
ISSUE	DATE	MOD NO.	DRN BY.	CHKD.	APPD.	STATUS

USED ON CMS

© CCLRC 2002

CCLRC COUNCIL FOR THE CENTRAL LABORATORY OF THE RESEARCH COUNCILS

RUTHERFORD APPLETON LABORATORY, CHILTON, OXON OX11 0QX.

TITLE PC3205M CIRCUIT

CMS TRACKER FED

VME FPGA

A 2-TE-0070-020-07-C

TOTAL NO. OF SHEETS 95

A 2-TE-0070-020-08-C THIS DRAWING CONFORMS TO B.S. 3939

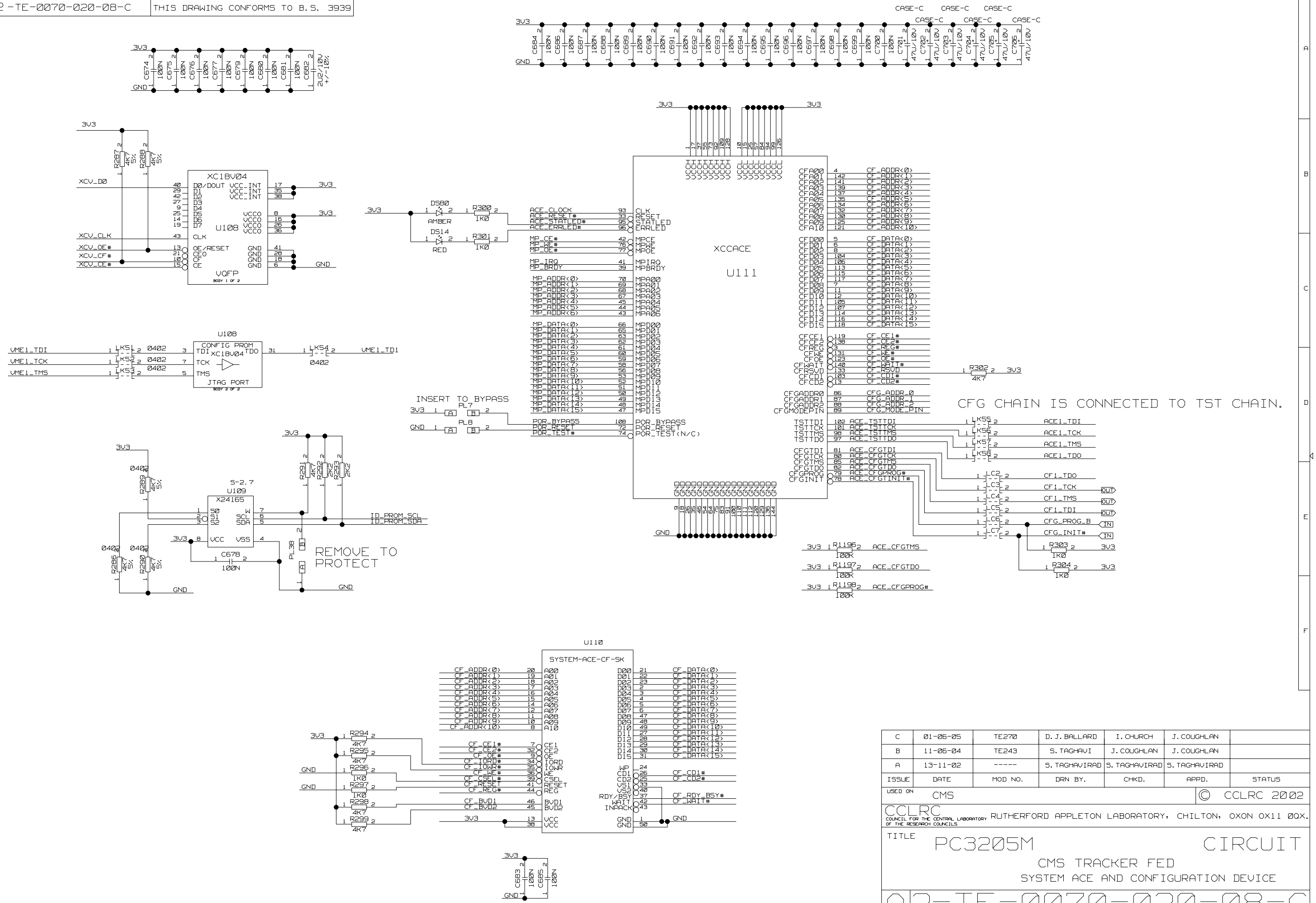

C	01-06-05	TE270	D. J. BALLARD	I. CHURCH	J. COUGHLAN	
B	11-06-04	TE243	S. TAGHAVI	J. COUGHLAN	J. COUGHLAN	
A	13-11-02	-----	S. TAGHAVIRAD	S. TAGHAVIRAD	S. TAGHAVIRAD	
ISSUE	DATE	MOD NO.	DRN BY.	CHKD.	APPD.	STATUS

USED ON CMS

© CCLRC 2002

CCLRC COUNCIL FOR THE CENTRAL LABORATORY OF THE RESEARCH COUNCILS

RUTHERFORD APPLETON LABORATORY, CHILTON, OXON OX11 0QX.

TITLE

PC3205M CIRCUIT

CMS TRACKER FED

SYSTEM ACE AND CONFIGURATION DEVICE

A 2-TE-0070-020-08-C

TOTAL NO. OF SHEETS 95

A 2-TE-0070-020-08-C

A 2-TE-0070-020-09-C THIS DRAWING CONFORMS TO B.S. 3939

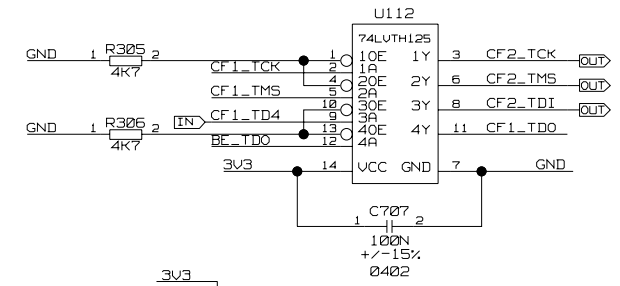

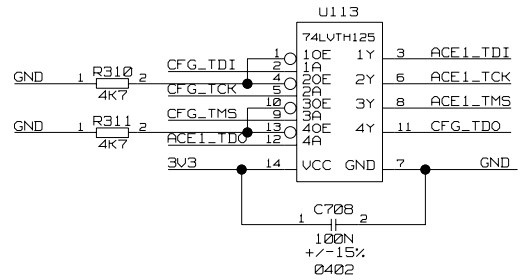

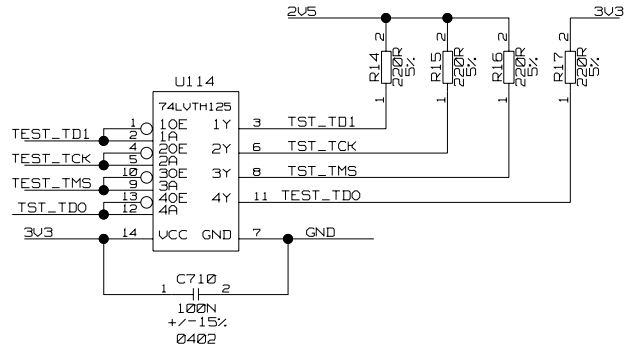

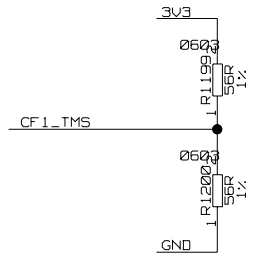

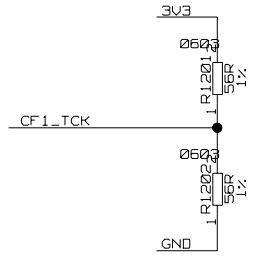

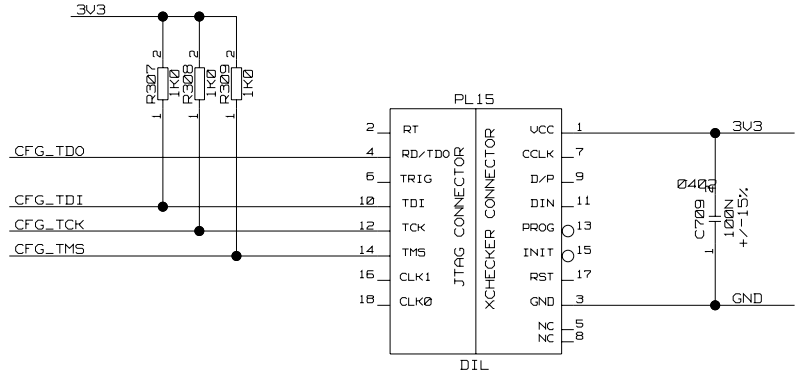

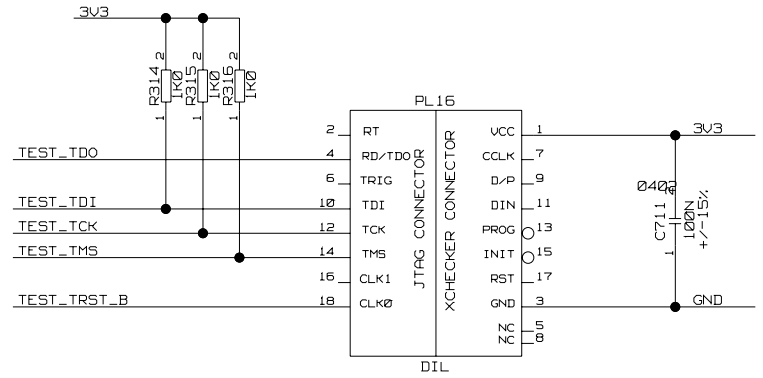

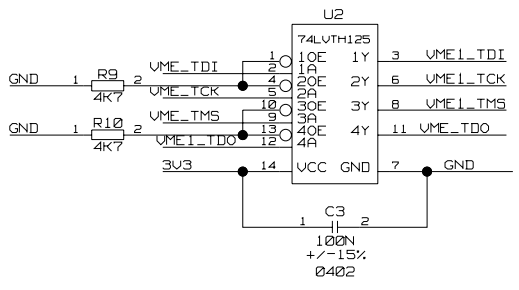

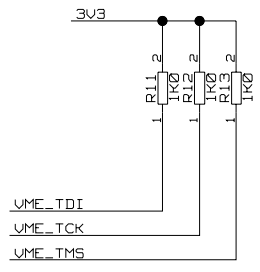

C	01-06-05	TE270	D. J. BALLARD	I. CHURCH	J. COUGHLAN	
B	11-06-04	TE243	S. TAGHAVI	J. COUGHLAN	J. COUGHLAN	
A	13-11-02	-----	S. TAGHAVIRAD	S. TAGHAVIRAD	S. TAGHAVIRAD	
ISSUE	DATE	MOD NO.	DRN BY.	CHKD.	APPD.	STATUS

USED ON CMS

© CCLRC 2002

CCLRC
COUNCIL FOR THE CENTRAL LABORATORY OF THE RESEARCH COUNCILS
RUTHERFORD APPLETON LABORATORY, CHILTON, OXON OX11 0QX.

TITLE PC3205M CIRCUIT

CMS TRACKER FED
JTAG CONNECTORS AND BUFFERS

A 2-TE-0070-020-09-C

TOTAL NO. OF SHEETS 95

A 2-TE-0070-020-09-C

A 2-TE-0070-020-10-C THIS DRAWING CONFORMS TO B.S. 3939

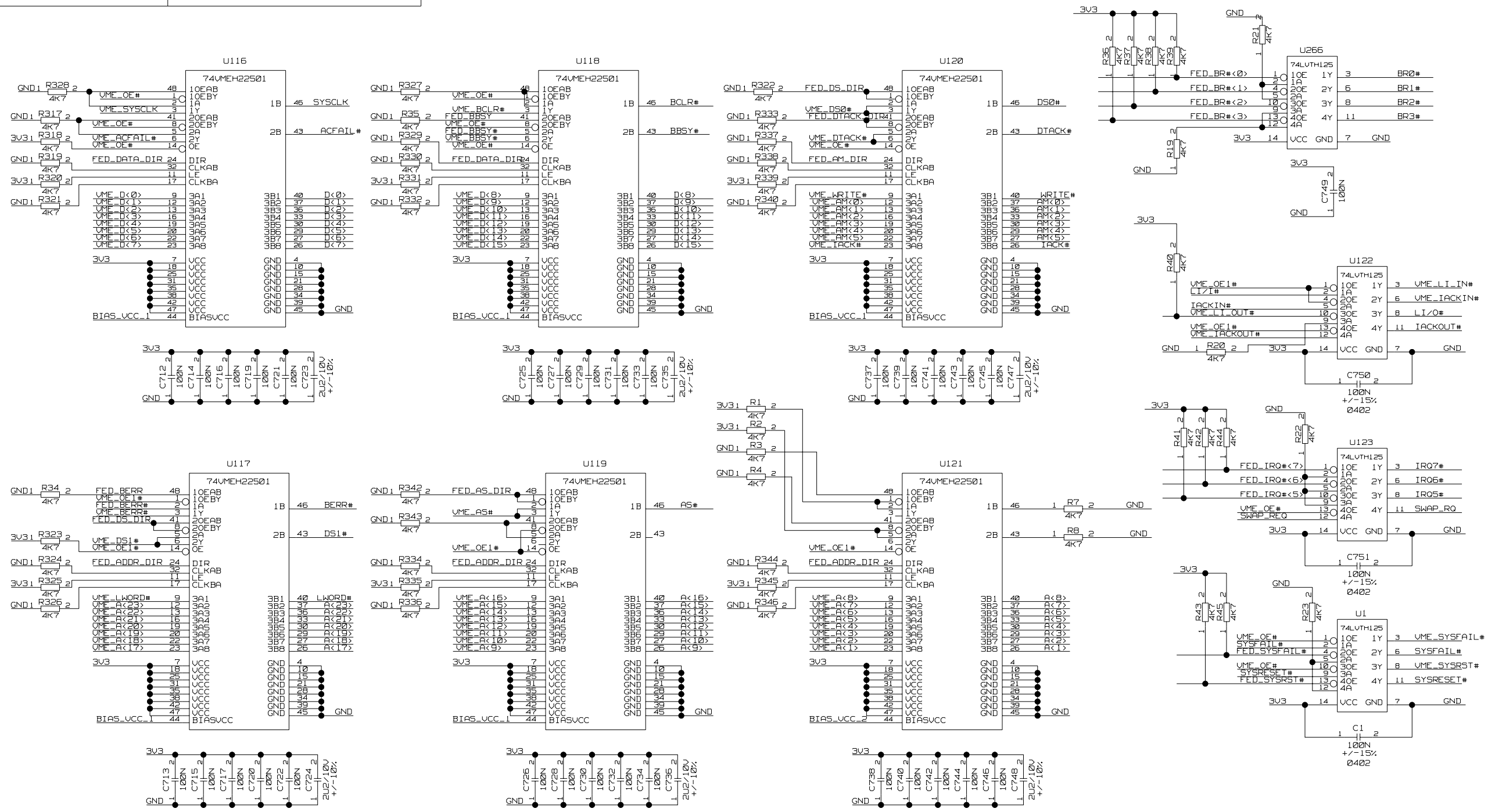

C	01-06-05	TE270	D. J. BALLARD	I. CHURCH	J. COUGHLAN	
B	11-06-04	TE243	S. TAGHAVI	J. COUGHLAN	J. COUGHLAN	
A	13-11-02	-----	S. TAGHAVIRAD	S. TAGHAVIRAD	S. TAGHAVIRAD	
ISSUE	DATE	MOD NO.	DRN BY.	CHKD.	APPD.	STATUS

USED ON CMS

© CCLRC 2002

CCLRC COUNCIL FOR THE CENTRAL LABORATORY OF THE RESEARCH COUNCILS
RUTHERFORD APPLETON LABORATORY, CHILTON, OXON OX11 0QX.

TITLE

PC3205M CIRCUIT

CMS TRACKER FED

J1 VME INTERFACE

A2-TE-0070-020-10-C

TOTAL NO. OF SHEETS 95

A 2-TE-0070-020-10-C

A | 2-TE-0070-020-11-C | THIS DRAWING CONFORMS TO B.S. 3939

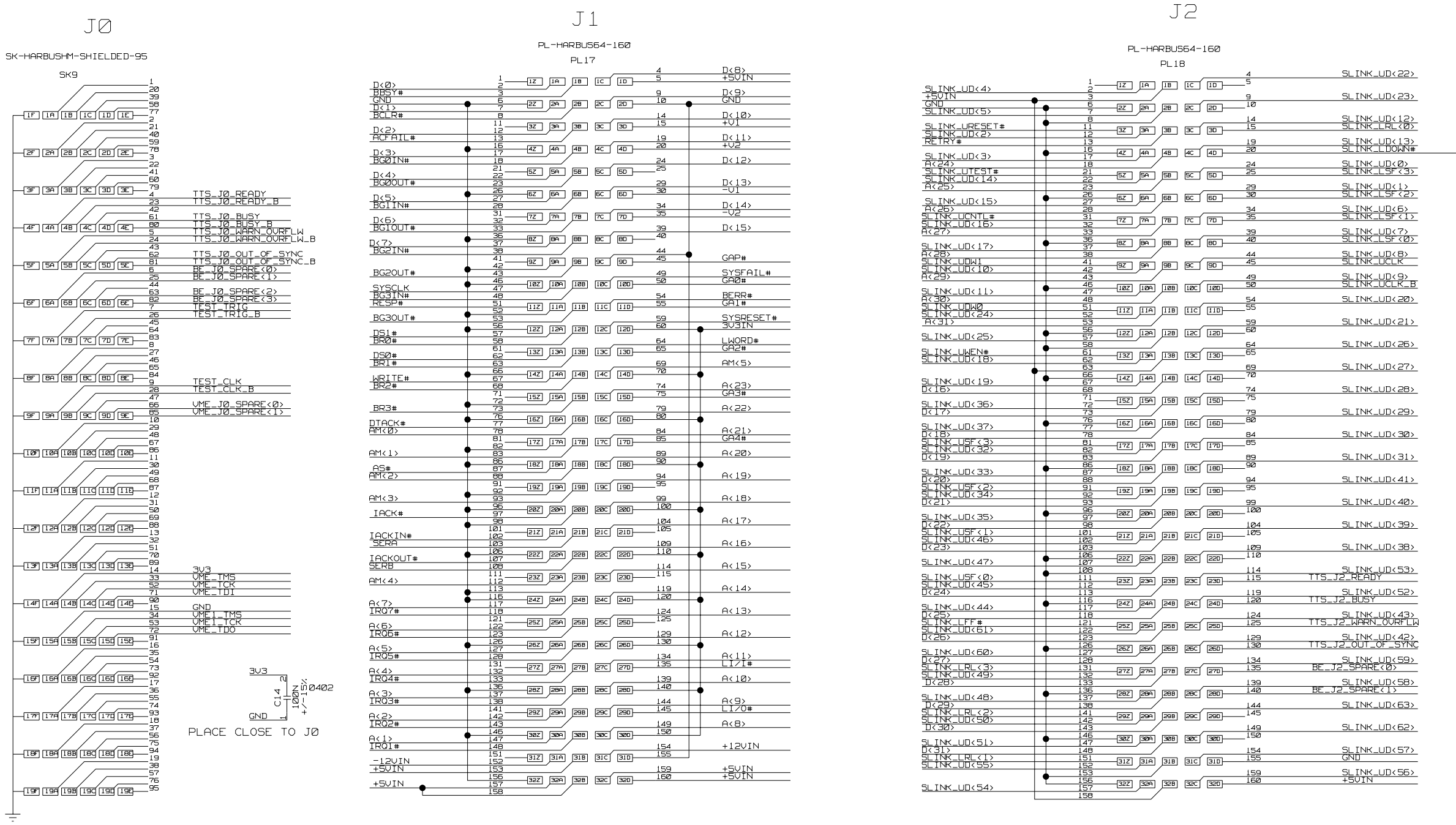

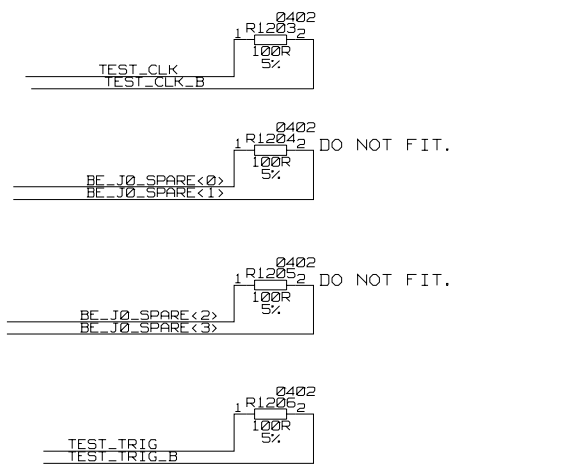

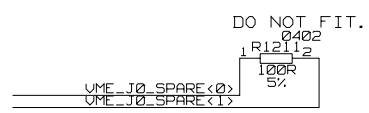

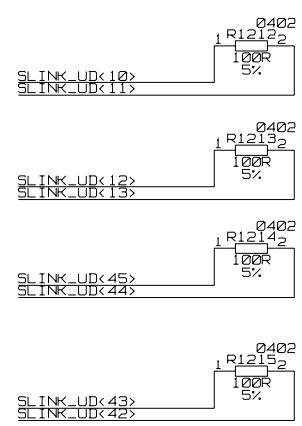

PLACE RESISTORS AT DESTINATION

C	01-06-05	TE270	D. J. BALLARD	I. CHURCH	J. COUGHLAN	
B	21-06-04	TE243	S. TAGHAVI	J. COUGHLAN	J. COUGHLAN	
A	13-11-02	-----	S. TAGHAVIRAD	S. TAGHAVIRAD	S. TAGHAVIRAD	
ISSUE	DATE	MOD NO.	DRN BY.	CHKD.	APPD.	STATUS

USED ON CMS

© CCLRC 2002

CCLRC
COUNCIL FOR THE CENTRAL LABORATORY OF THE RESEARCH COUNCILS
RUTHERFORD APPLETON LABORATORY, CHILTON, OXON OX11 0QX.

TITLE
PC3205M CIRCUIT
CMS TRACKER FED
CONNECTORS

A 2-TE-0070-020-11-C

TOTAL NO. OF SHEETS 95

A 2-TE-0070-020-11-C

A 2-TE-0070-020-12-C THIS DRAWING CONFORMS TO B.S. 3939

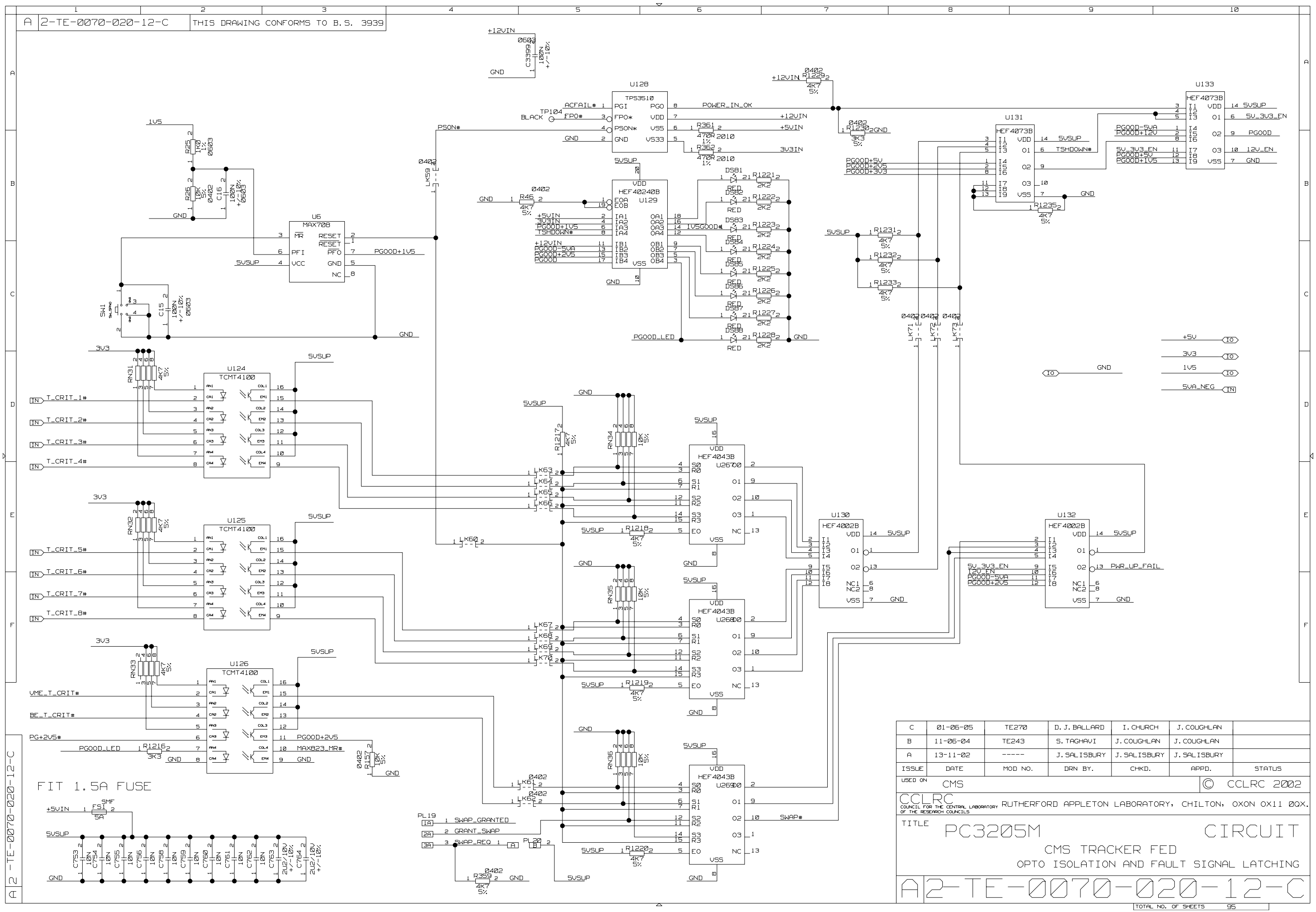

C	01-06-05	TE270	D. J. BALLARD	I. CHURCH	J. COUGHLAN	
B	11-06-04	TE243	S. TAGHAVI	J. COUGHLAN	J. COUGHLAN	
A	13-11-02	-----	J. SALISBURY	J. SALISBURY	J. SALISBURY	
ISSUE	DATE	MOD NO.	DRN BY.	CHKD.	APPD.	STATUS

USED ON CMS

© CCLRC 2002

CCLRC COUNCIL FOR THE CENTRAL LABORATORY OF THE RESEARCH COUNCILS
RUTHERFORD APPLETON LABORATORY, CHILTON, OXON OX11 0QX.

TITLE

PC3205M CIRCUIT

CMS TRACKER FED

OPTO ISOLATION AND FAULT SIGNAL LATCHING

A 2-TE-0070-020-12-C

TOTAL NO. OF SHEETS 95

A | 2-TE-0070-020-13-C | THIS DRAWING CONFORMS TO B.S. 3939

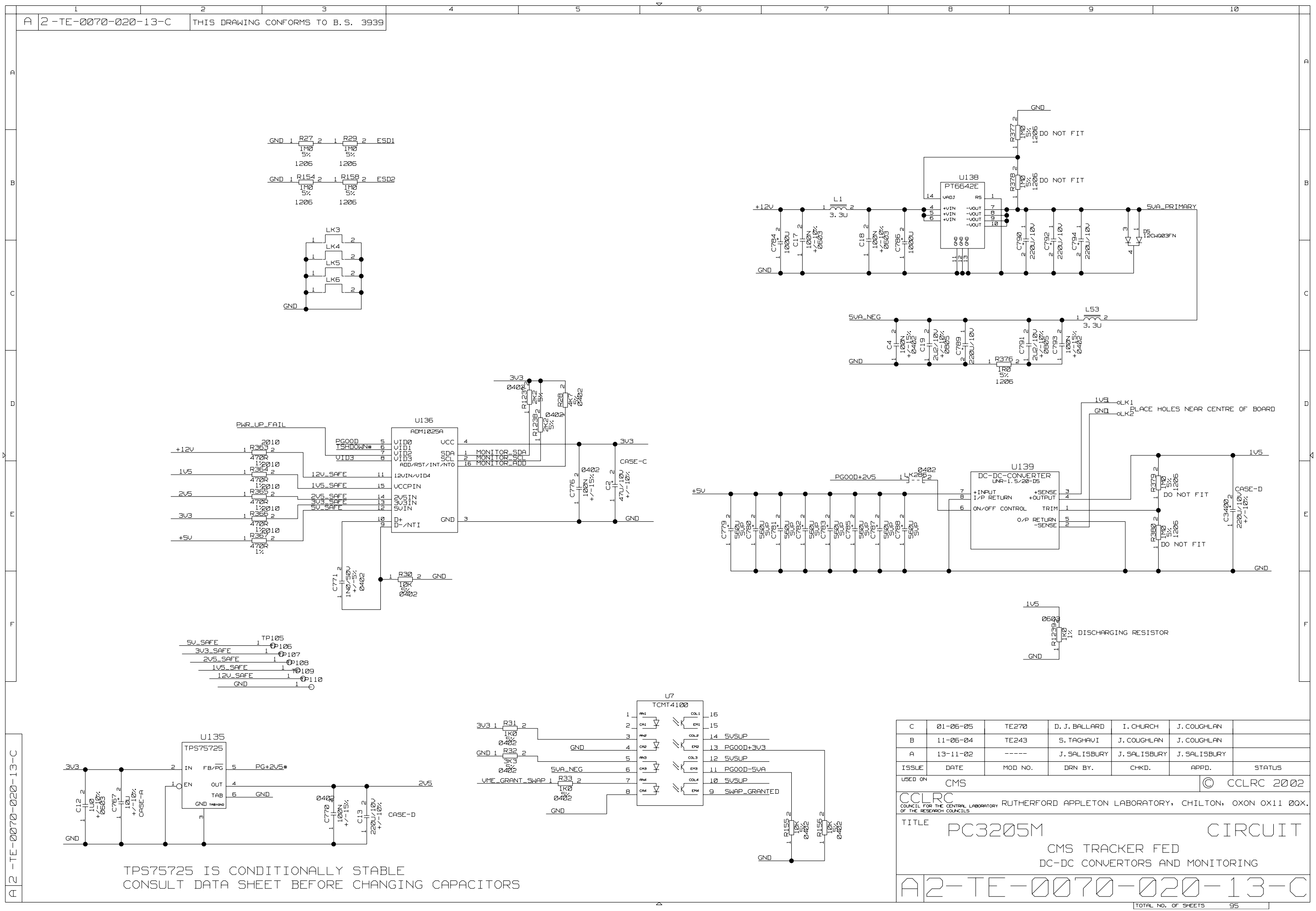

TPS75725 IS CONDITIONALLY STABLE
CONSULT DATA SHEET BEFORE CHANGING CAPACITORS

ISSUE	DATE	MOD NO.	DRN BY.	CHKD.	APPD.	STATUS
C	01-06-05	TE270	D.J. BALLARD	I. CHURCH	J. COUGHLAN	
B	11-06-04	TE243	S. TAGHAVI	J. COUGHLAN	J. COUGHLAN	
A	13-11-02	-----	J. SALISBURY	J. SALISBURY	J. SALISBURY	

USED ON CMS

© CCLRC 2002

CCLRC COUNCIL FOR THE CENTRAL LABORATORY OF THE RESEARCH COUNCILS
RUTHERFORD APPLETON LABORATORY, CHILTON, OXON OX11 0QX.

TITLE

PC3205M CIRCUIT

CMS TRACKER FED
DC-DC CONVERTORS AND MONITORING

A 2-TE-0070-020-13-C

TOTAL NO. OF SHEETS 95

A 2-TE-0070-020-14-C THIS DRAWING CONFORMS TO B.S. 3939

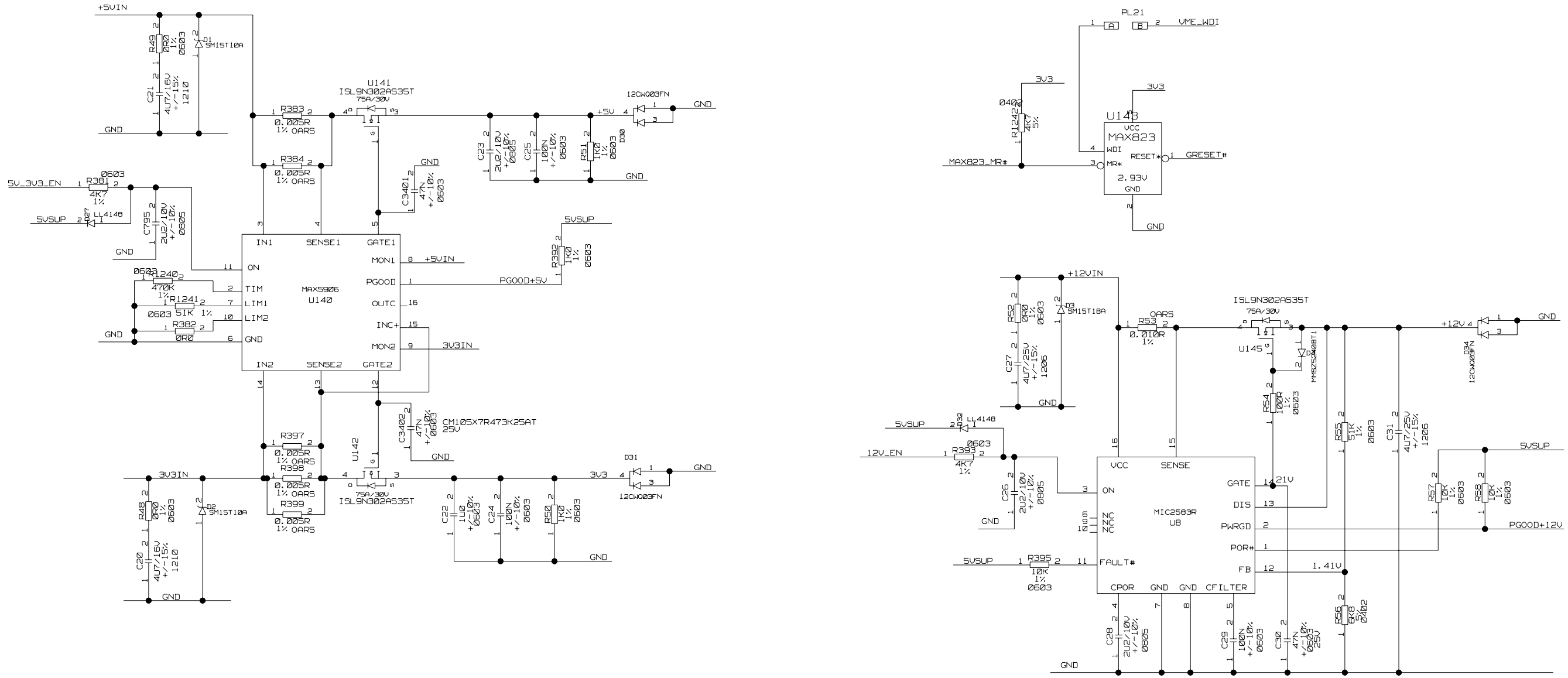

C	01-06-05	TE270	D. J. BALLARD	I. CHURCH	J. COUGHLAN	
B	11-06-04	TE243	S. TAGHAVI	J. COUGHLAN	J. COUGHLAN	
A	13-11-02	-----	J. SALISBURY	J. SALISBURY	J. SALISBURY	
ISSUE	DATE	MOD NO.	DRN BY.	CHKD.	APPD.	STATUS

USED ON CMS

© CCLRC 2002

CCLRC COUNCIL FOR THE CENTRAL LABORATORY OF THE RESEARCH COUNCILS
RUTHERFORD APPLETON LABORATORY, CHILTON, OXON OX11 0QX.

TITLE PC3205M CIRCUIT

CMS TRACKER FED

ELECTRONIC POWER SUPPLY PROTECTION

A 2-TE-0070-020-14-C

TOTAL NO. OF SHEETS 95

A 2-TE-0070-020-14-C

A 2 -TE-0070-020-15-C THIS DRAWING CONFORMS TO B.S. 3939

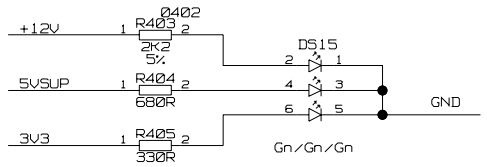

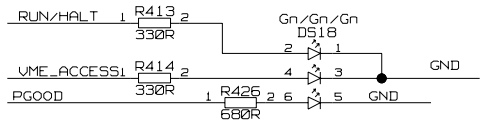

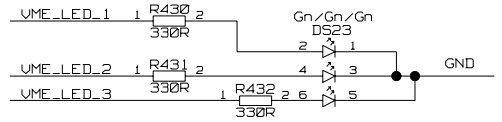

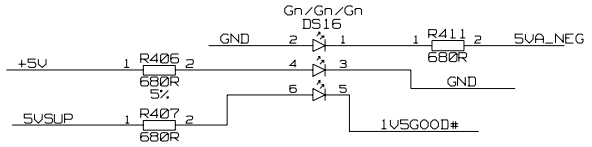

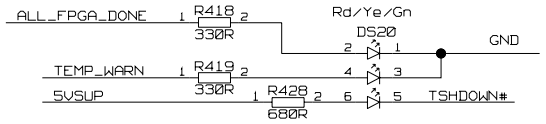

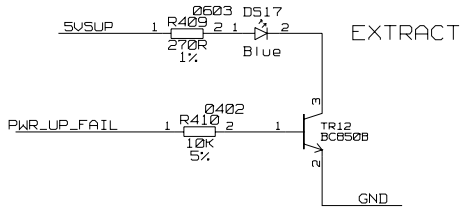

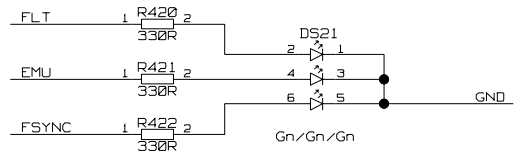

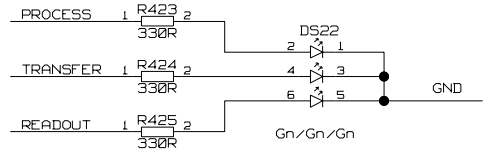

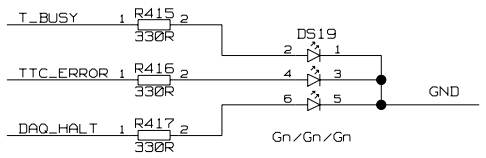

C	01-06-05	TE270	D. J. BALLARD	I. CHURCH	J. COUGHLAN	
B	11-06-04	TE243	S. TAGHAVI	J. COUGHLAN	J. COUGHLAN	
A	13-11-02	-----	J. SALISBURY	J. SALISBURY	J. SALISBURY	
ISSUE	DATE	MOD NO.	DRN BY.	CHKD.	APPD.	STATUS

USED ON CMS

© CCLRC 2002

CCLRC COUNCIL FOR THE CENTRAL LABORATORY OF THE RESEARCH COUNCILS
RUTHERFORD APPLETON LABORATORY, CHILTON, OXON OX11 0QX.

TITLE

PC3205M CIRCUIT

CMS TRACKER FED
FRONT PANEL DISPLAY

A 2-TE-0070-020-15-C

TOTAL NO. OF SHEETS 95

A 2 -TE-0070-020-15-C

A | 2-TE-0070-020<16>C | THIS DRAWING CONFORMS TO B.S. 3939

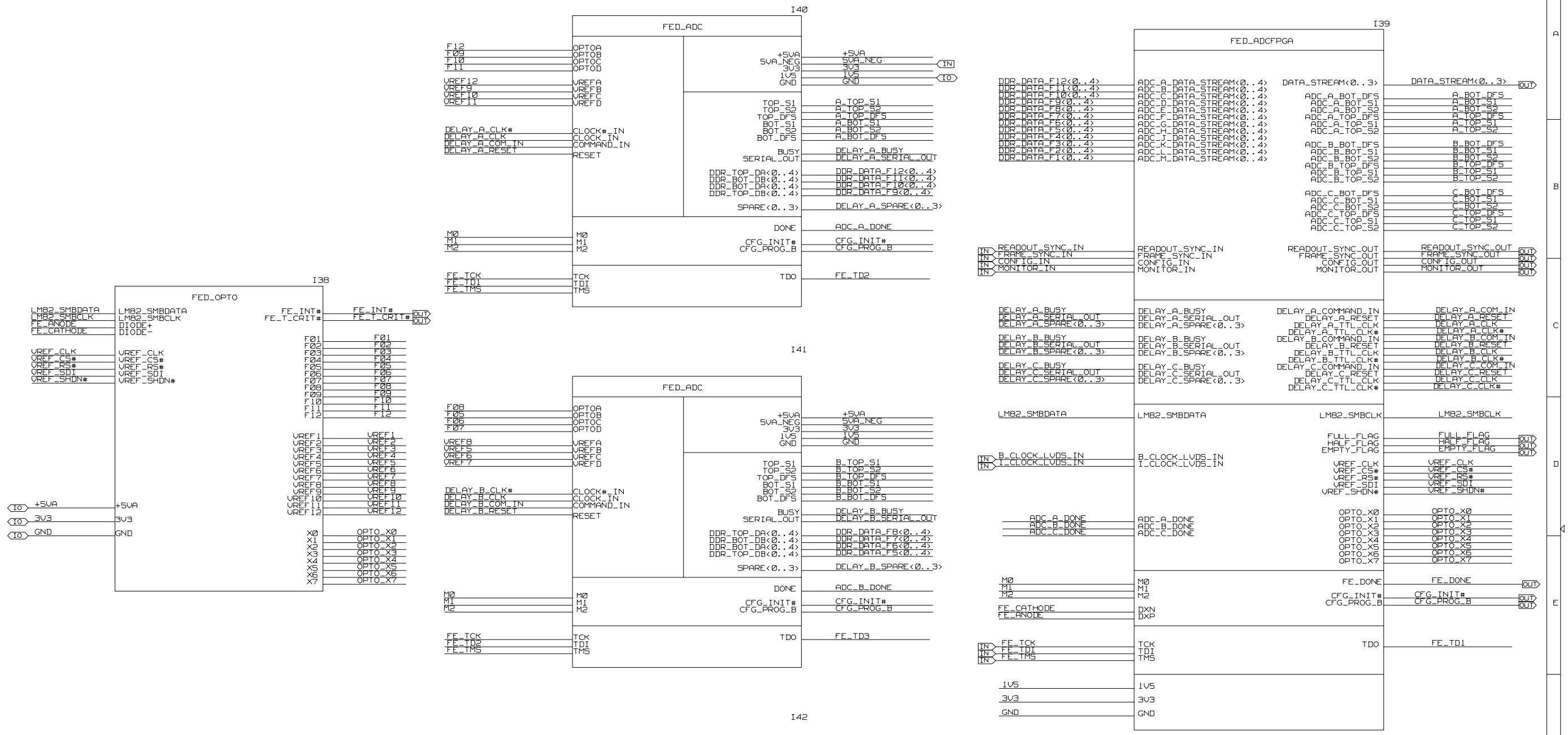

ISSUE	DATE	MOD NO.	DRN BY.	CHKD.	APPD.	STATUS
C	01-06-05	TE270	D.J. BALLARD	I. CHURCH	J. COUGHLAN	
B	11-06-04	TE243	S. TAGHAVI	J. COUGHLAN	J. COUGHLAN	
A	13-11-02	-----	S. TAGHAVIRAD	S. TAGHAVIRAD	S. TAGHAVIRAD	

USED ON CMS

© CCLRC 2002

CCLRC COUNCIL FOR THE CENTRAL LABORATORY OF THE RESEARCH COUNCILS
RUTHERFORD APPLETON LABORATORY, CHILTON, OXON OX11 0QX.

TITLE PC3205M CIRCUIT

CMS TRACKER FED CHANNEL

A 2-TE-0070-020<16>C

TOTAL NO. OF SHEETS 95

A 2-TE-0070-020<16>C

A 2-TE-0070-020<17>C THIS DRAWING CONFORMS TO B.S. 3939

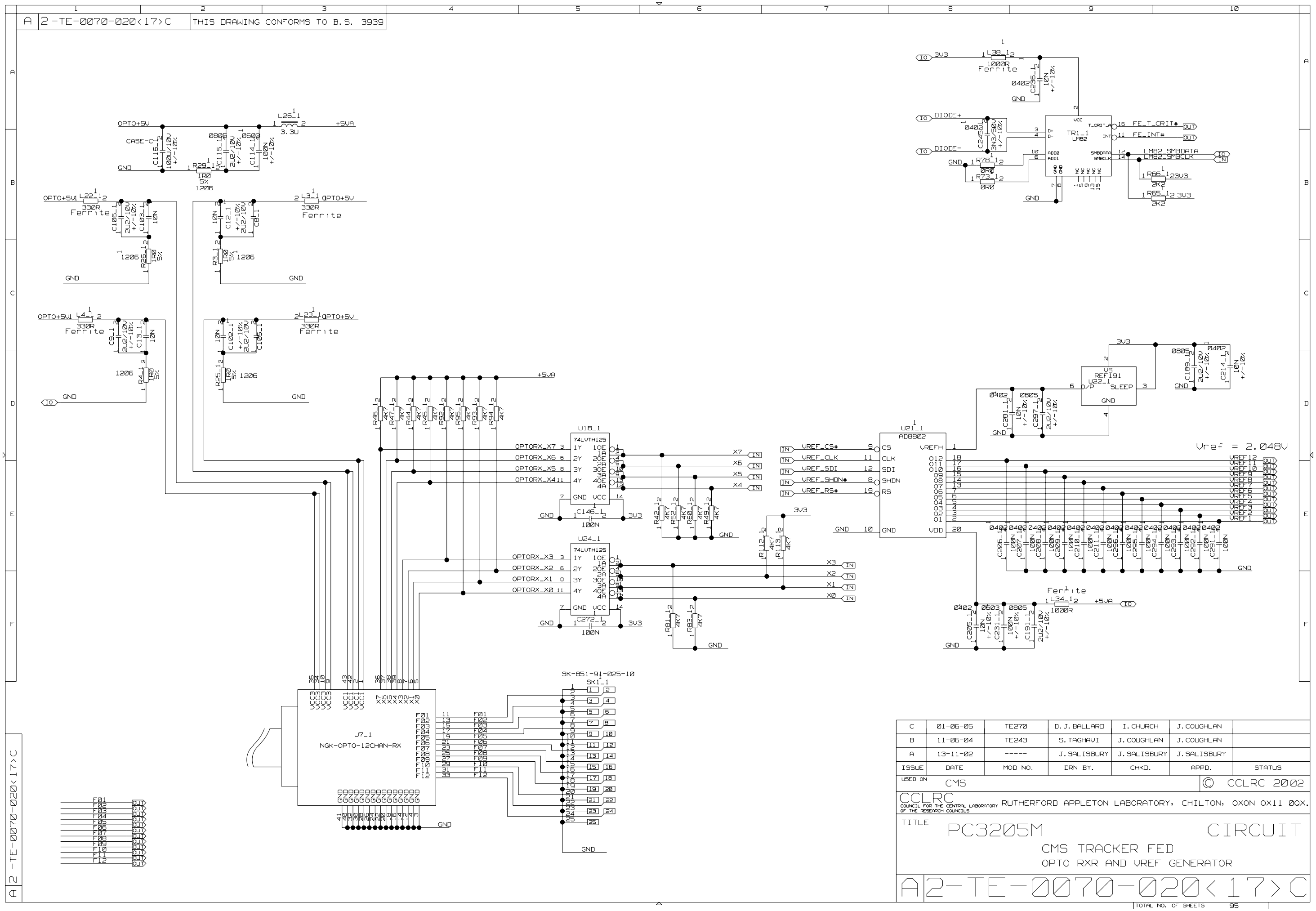

ISSUE	DATE	MOD NO.	DRN BY.	CHKD.	APPD.	STATUS
C	01-06-05	TE270	D.J. BALLARD	I. CHURCH	J. COUGHLAN	
B	11-06-04	TE243	S. TAGHAVI	J. COUGHLAN	J. COUGHLAN	
A	13-11-02	-----	J. SALISBURY	J. SALISBURY	J. SALISBURY	

USED ON CMS

© CCLRC 2002

CCLRC COUNCIL FOR THE CENTRAL LABORATORY OF THE RESEARCH COUNCILS
RUTHERFORD APPLETON LABORATORY, CHILTON, OXON OX11 0QX.

TITLE

PC3205M CIRCUIT

CMS TRACKER FED

OPTO RXR AND VREF GENERATOR

A 2-TE-0070-020<17>C

TOTAL NO. OF SHEETS 95

A 2-TE-0070-020<18>C THIS DRAWING CONFORMS TO B.S. 3939

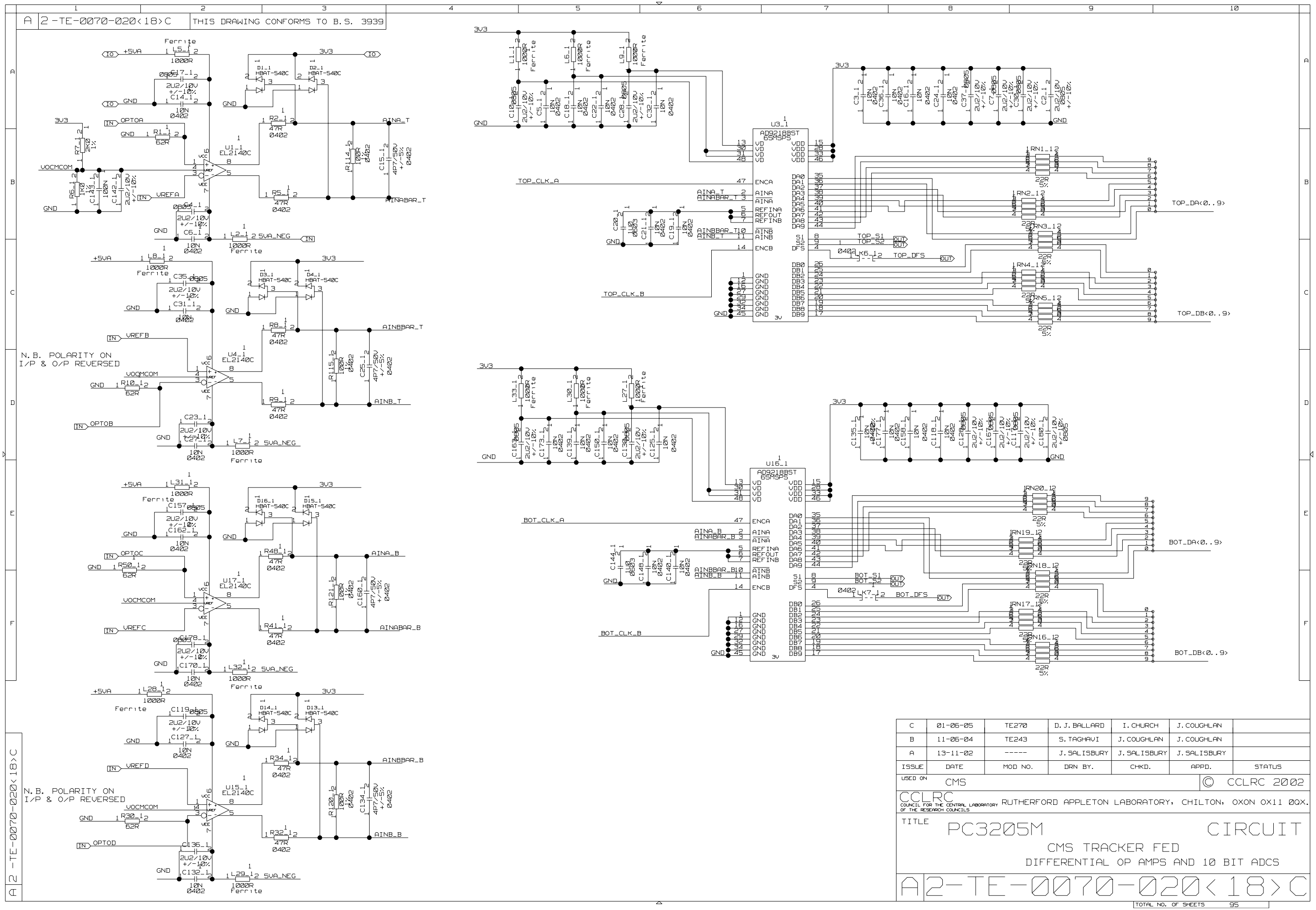

C	01-06-05	TE270	D. J. BALLARD	I. CHURCH	J. COUGHLAN	
B	11-06-04	TE243	S. TAGHAVI	J. COUGHLAN	J. COUGHLAN	
A	13-11-02	-----	J. SALISBURY	J. SALISBURY	J. SALISBURY	
ISSUE	DATE	MOD NO.	DRN BY.	CHKD.	APPD.	STATUS

USED ON CMS

© CCLRC 2002

CCLRC COUNCIL FOR THE CENTRAL LABORATORY OF THE RESEARCH COUNCILS
RUTHERFORD APPLETON LABORATORY, CHILTON, OXON OX11 0QX.

TITLE

PC3205M CIRCUIT

CMS TRACKER FED

DIFFERENTIAL OP AMPS AND 10 BIT ADCS

A 2-TE-0070-020<18>C

TOTAL NO. OF SHEETS 95

A 2-TE-0070-020<19>C THIS DRAWING CONFORMS TO B.S. 3939

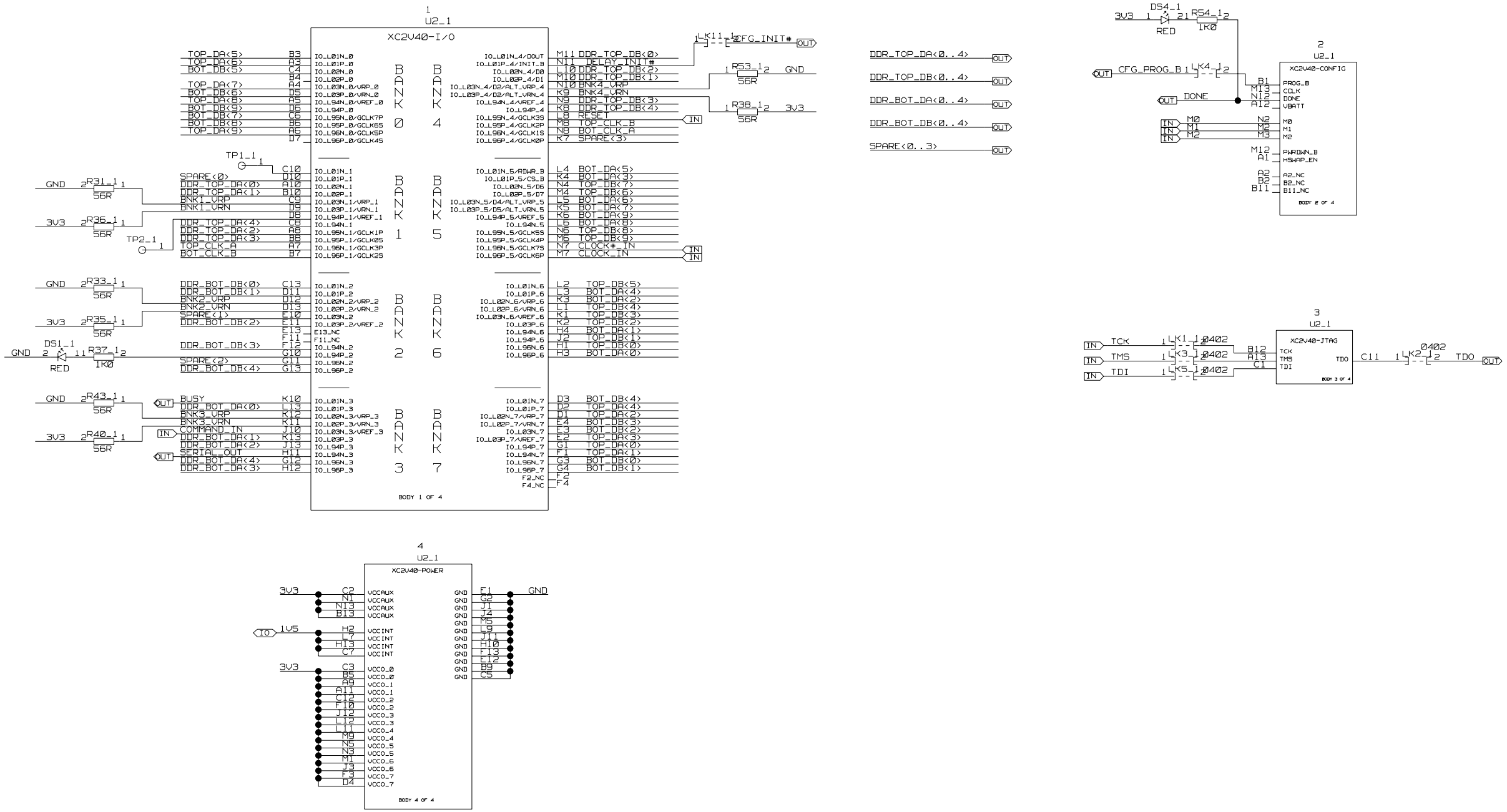

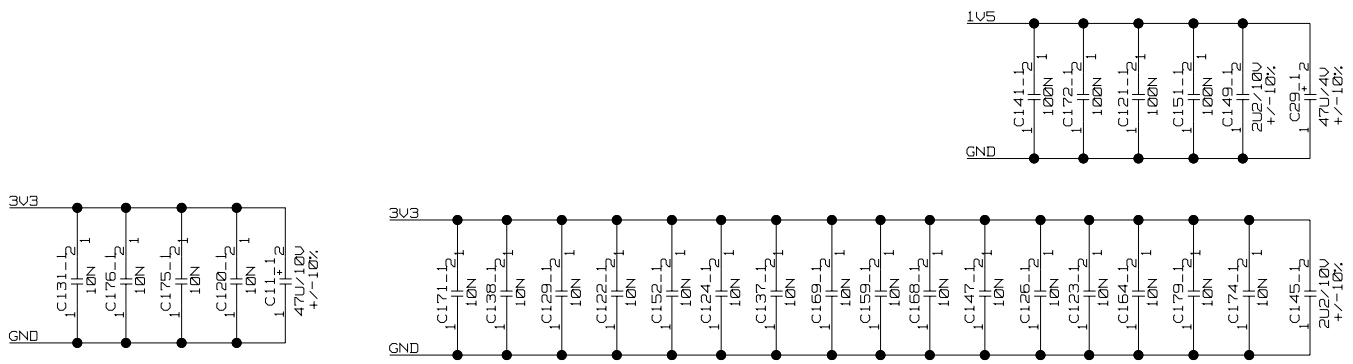

C	01-06-05	TE270	D. J. BALLARD	I. CHURCH	J. COUGHLAN	
B	11-06-04	TE243	S. TAGHAVI	J. COUGHLAN	J. COUGHLAN	
A	13-11-02	-----	S. TAGHAVIRAD	S. TAGHAVIRAD	S. TAGHAVIRAD	
ISSUE	DATE	MOD NO.	DRN BY.	CHKD.	APPD.	STATUS

USED ON CMS

© CCLRC 2002

CCLRC COUNCIL FOR THE CENTRAL LABORATORY OF THE RESEARCH COUNCILS
RUTHERFORD APPLETON LABORATORY, CHILTON, OXON OX11 0QX.

TITLE

PC3205M CIRCUIT

CMS TRACKER FED

DELAY FPGA

A 2-TE-0070-020<19>C

TOTAL NO. OF SHEETS 95

A 2-TE-0070-020<19>C

A 2-TE-0070-020<18>C THIS DRAWING CONFORMS TO B.S. 3939

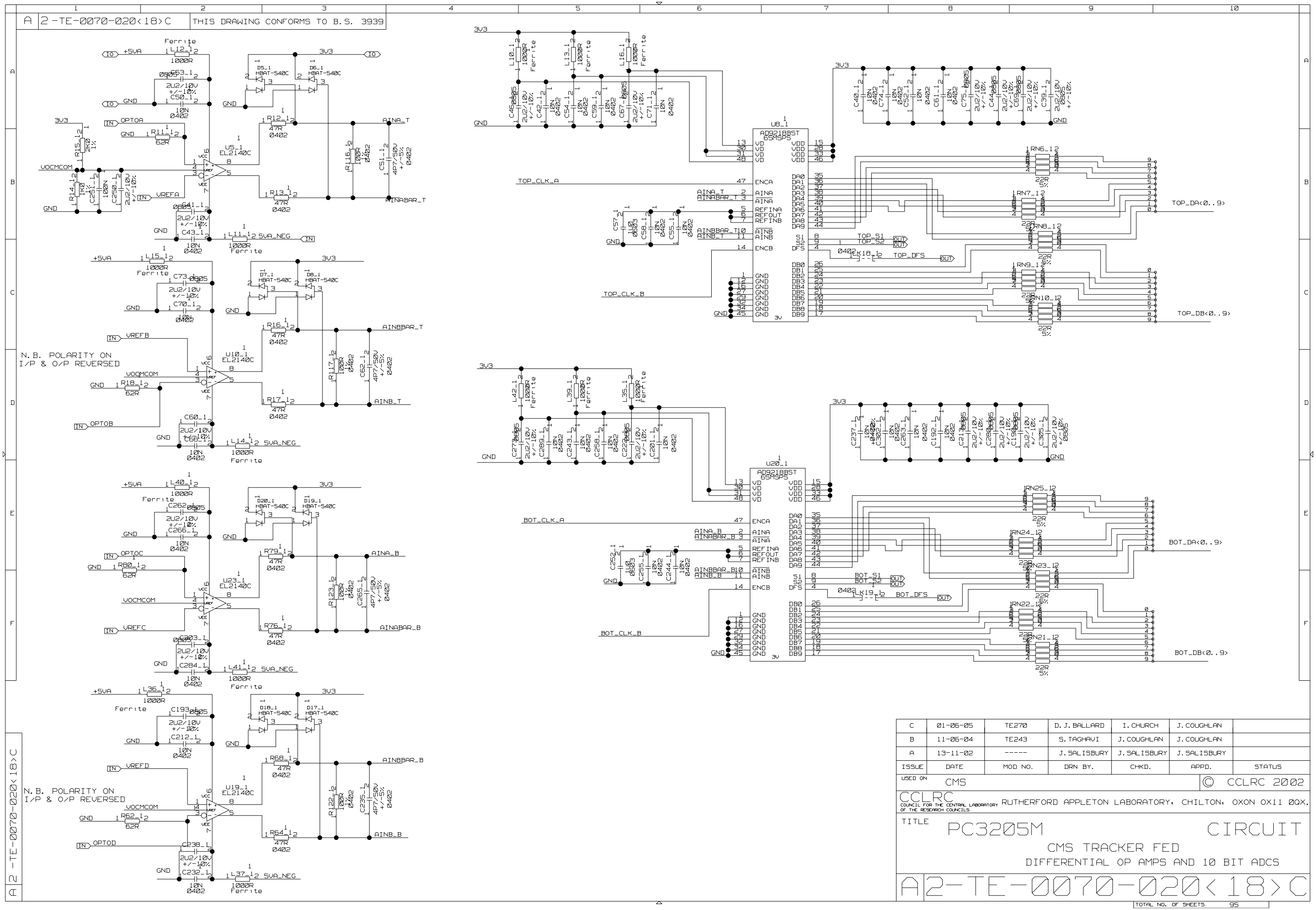

C	01-06-05	TE270	D. J. BALLARD	I. CHURCH	J. COUGHLAN	
B	11-06-04	TE243	S. TAGHAVI	J. COUGHLAN	J. COUGHLAN	
A	13-11-02	-----	J. SALISBURY	J. SALISBURY	J. SALISBURY	
ISSUE	DATE	MOD NO.	DRN BY.	CHKD.	APPD.	STATUS

USED ON CMS

© CCLRC 2002

CCLRC COUNCIL FOR THE CENTRAL LABORATORY OF THE RESEARCH COUNCILS
RUTHERFORD APPLETON LABORATORY, CHILTON, OXON OX11 0QX.

TITLE

PC3205M CIRCUIT

CMS TRACKER FED

DIFFERENTIAL OP AMPS AND 10 BIT ADCS

A 2-TE-0070-020<18>C

TOTAL NO. OF SHEETS 95

A | 2-TE-0070-020<19>C | THIS DRAWING CONFORMS TO B.S. 3939

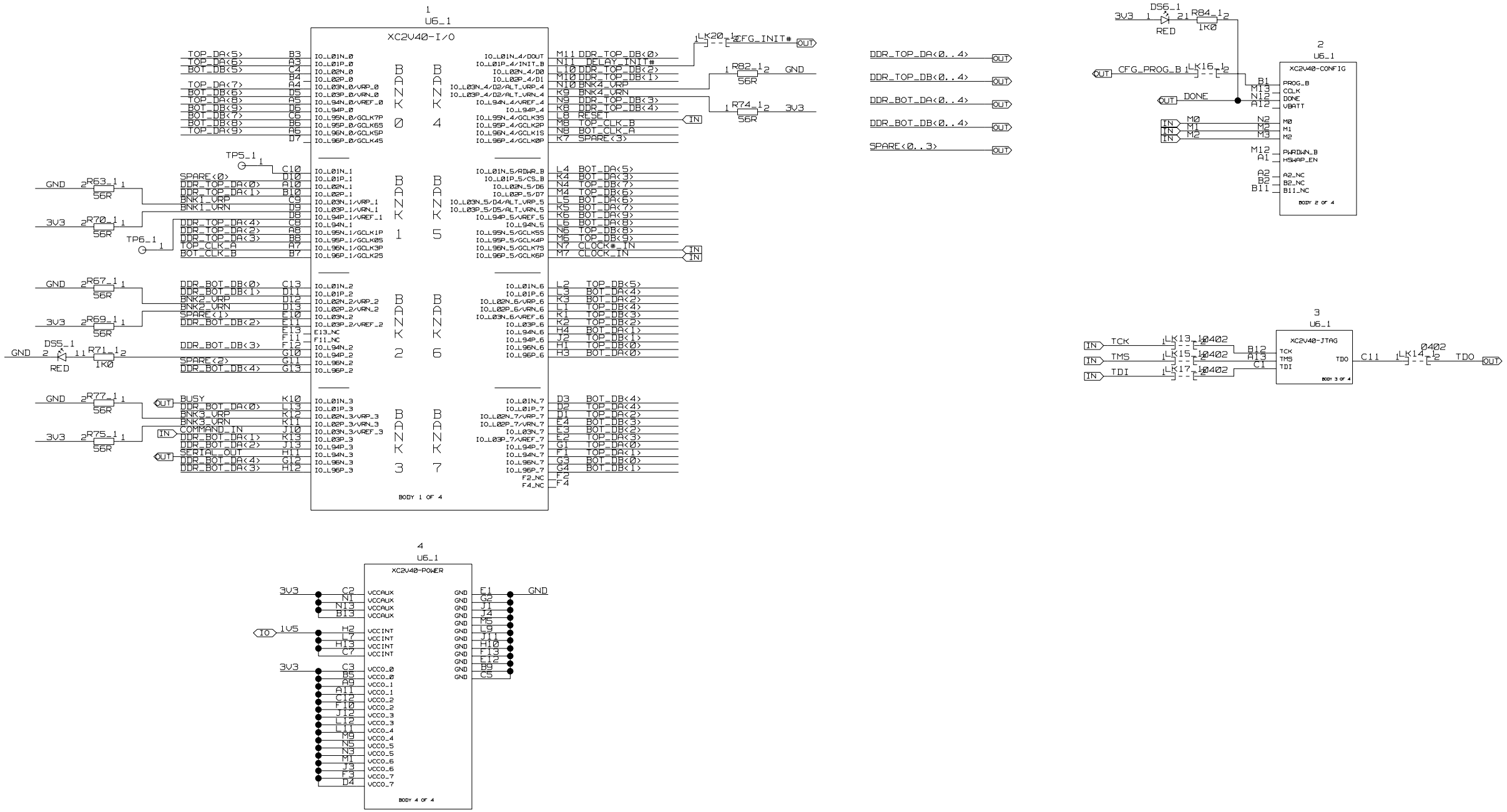

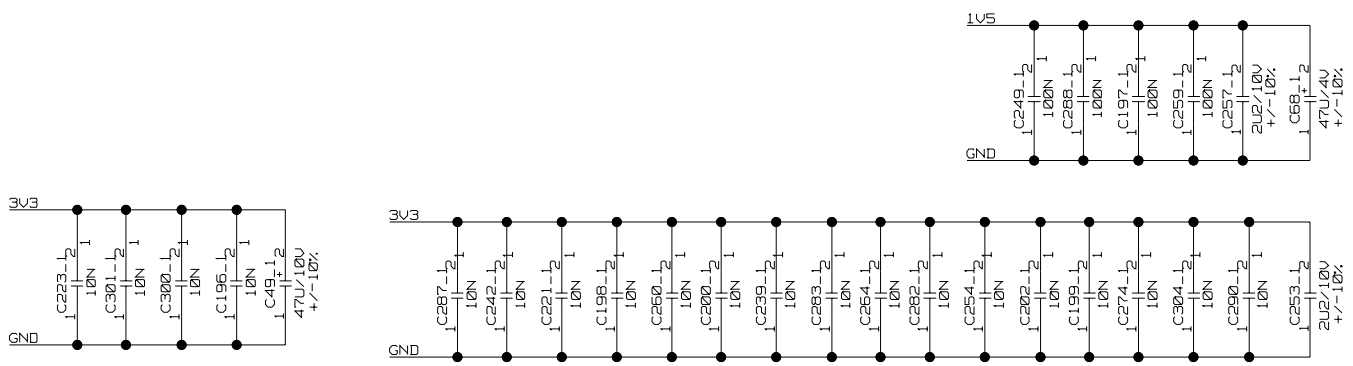

C	01-06-05	TE270	D. J. BALLARD	I. CHURCH	J. COUGHLAN	
B	11-06-04	TE243	S. TAGHAVI	J. COUGHLAN	J. COUGHLAN	
A	13-11-02	-----	S. TAGHAVIRAD	S. TAGHAVIRAD	S. TAGHAVIRAD	
ISSUE	DATE	MOD NO.	DRN BY.	CHKD.	APPD.	STATUS

USED ON CMS

© CCLRC 2002

CCLRC COUNCIL FOR THE CENTRAL LABORATORY OF THE RESEARCH COUNCILS
RUTHERFORD APPLETON LABORATORY, CHILTON, OXON OX11 0QX.

TITLE

PC3205M CIRCUIT

CMS TRACKER FED

DELAY FPGA

A 2-TE-0070-020<19>C

TOTAL NO. OF SHEETS 95

A 2-TE-0070-020<19>C

A 2-TE-0070-020<18>C THIS DRAWING CONFORMS TO B.S. 3939

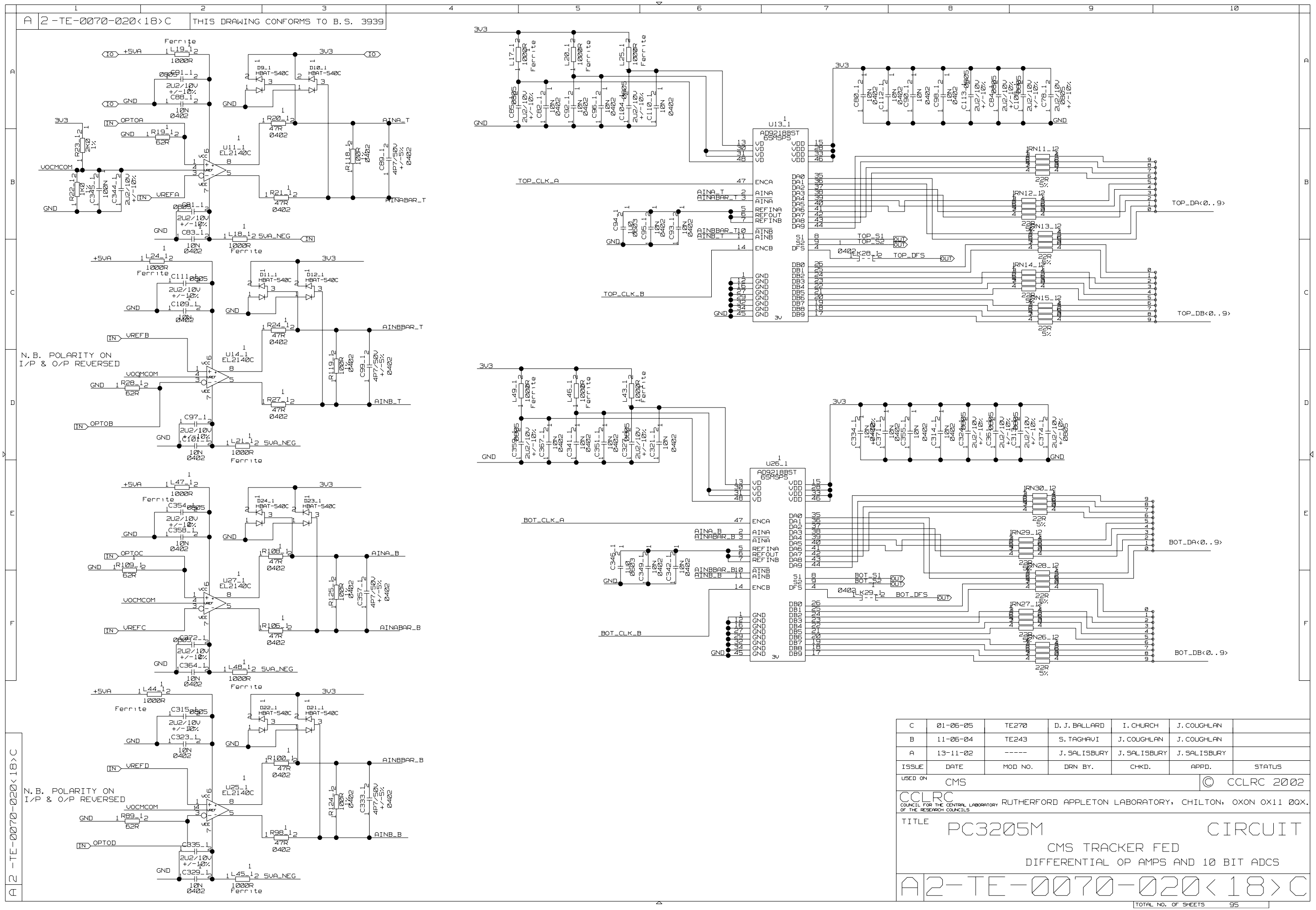

C	01-06-05	TE270	D. J. BALLARD	I. CHURCH	J. COUGHLAN	
B	11-06-04	TE243	S. TAGHAVI	J. COUGHLAN	J. COUGHLAN	
A	13-11-02	-----	J. SALISBURY	J. SALISBURY	J. SALISBURY	
ISSUE	DATE	MOD NO.	DRN BY.	CHKD.	APPD.	STATUS

USED ON CMS

© CCLRC 2002

CCLRC COUNCIL FOR THE CENTRAL LABORATORY OF THE RESEARCH COUNCILS
RUTHERFORD APPLETON LABORATORY, CHILTON, OXON OX11 0QX.

TITLE

PC3205M CIRCUIT

CMS TRACKER FED

DIFFERENTIAL OP AMPS AND 10 BIT ADCS

A 2-TE-0070-020<18>C

TOTAL NO. OF SHEETS 95

A 2-TE-0070-020<18>C

A 2-TE-0070-020<19>C THIS DRAWING CONFORMS TO B.S. 3939

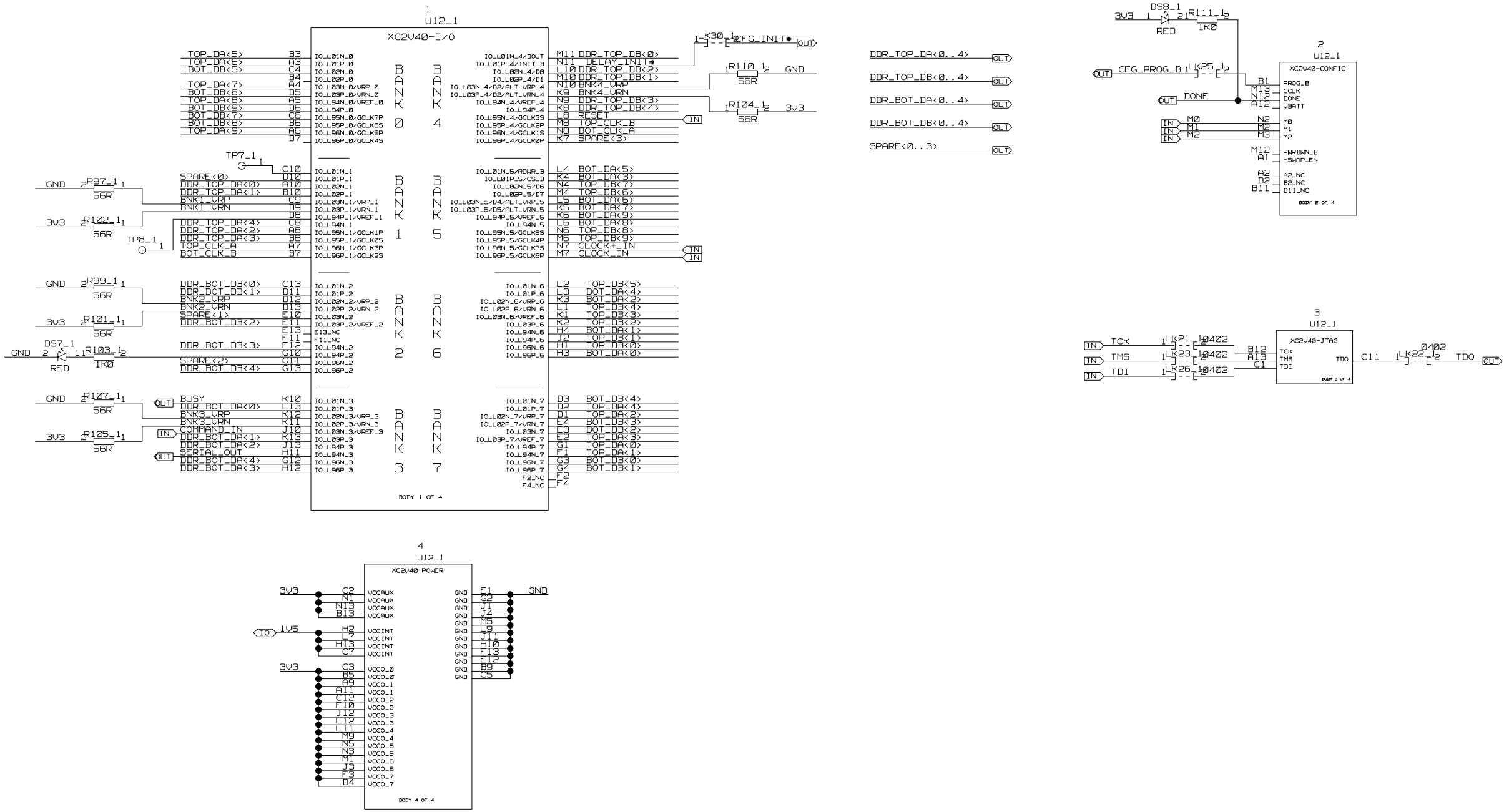

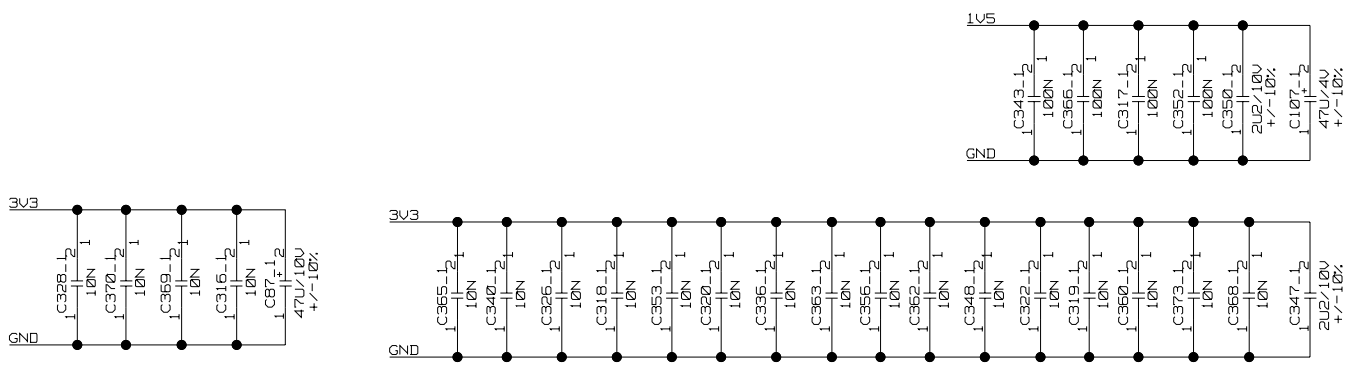

C	01-06-05	TE270	D. J. BALLARD	I. CHURCH	J. COUGHLAN	
B	11-06-04	TE243	S. TAGHAVI	J. COUGHLAN	J. COUGHLAN	
A	13-11-02	-----	S. TAGHAVIRAD	S. TAGHAVIRAD	S. TAGHAVIRAD	
ISSUE	DATE	MOD NO.	DRN BY.	CHKD.	APPD.	STATUS

USED ON CMS

© CCLRC 2002

CCLRC COUNCIL FOR THE CENTRAL LABORATORY OF THE RESEARCH COUNCILS
RUTHERFORD APPLETON LABORATORY, CHILTON, OXON OX11 0QX.

TITLE

PC3205M CIRCUIT

CMS TRACKER FED

DELAY FPGA

A 2-TE-0070-020<19>C

TOTAL NO. OF SHEETS 95

A 2-TE-0070-020<20>C THIS DRAWING CONFORMS TO B.S. 3939

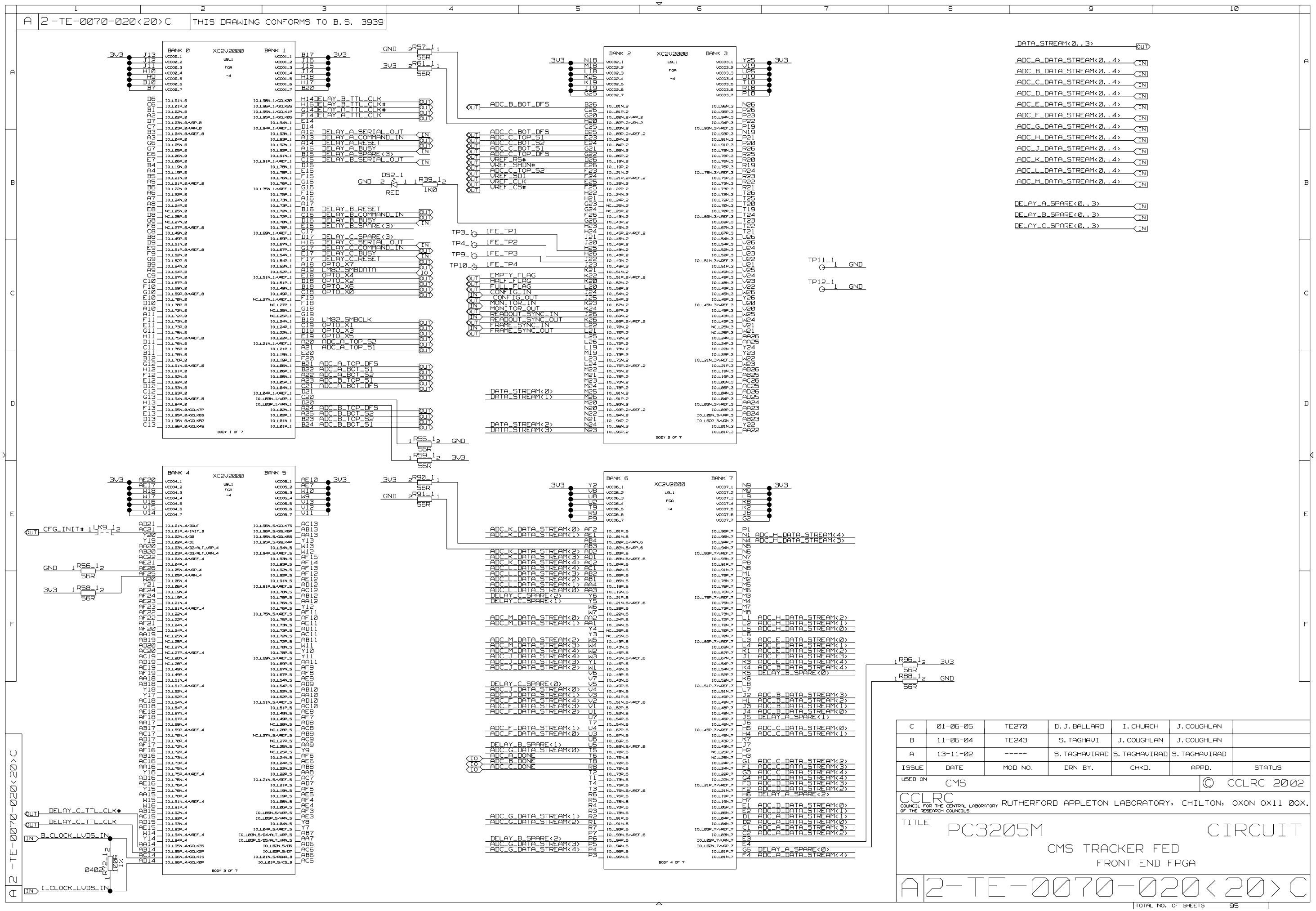

C	01-06-05	TE270	D. J. BALLARD	I. CHURCH	J. COUGHLAN	
B	11-06-04	TE243	S. TAGHAVI	J. COUGHLAN	J. COUGHLAN	
A	13-11-02	-----	S. TAGHAVIRAD	S. TAGHAVIRAD	S. TAGHAVIRAD	
ISSUE	DATE	MOD NO.	DRN BY.	CHKD.	APPD.	STATUS

USED ON CMS

© CCLRC 2002

CCLRC COUNCIL FOR THE CENTRAL LABORATORY OF THE RESEARCH COUNCILS

RUTHERFORD APPLETON LABORATORY, CHILTON, OXON OX11 0QX.

TITLE

PC3205M CIRCUIT

CMS TRACKER FED

FRONT END FPGA

A 2-TE-0070-020<20>C

TOTAL NO. OF SHEETS 95

A 2-TE-0070-020<21>C THIS DRAWING CONFORMS TO B.S. 3939

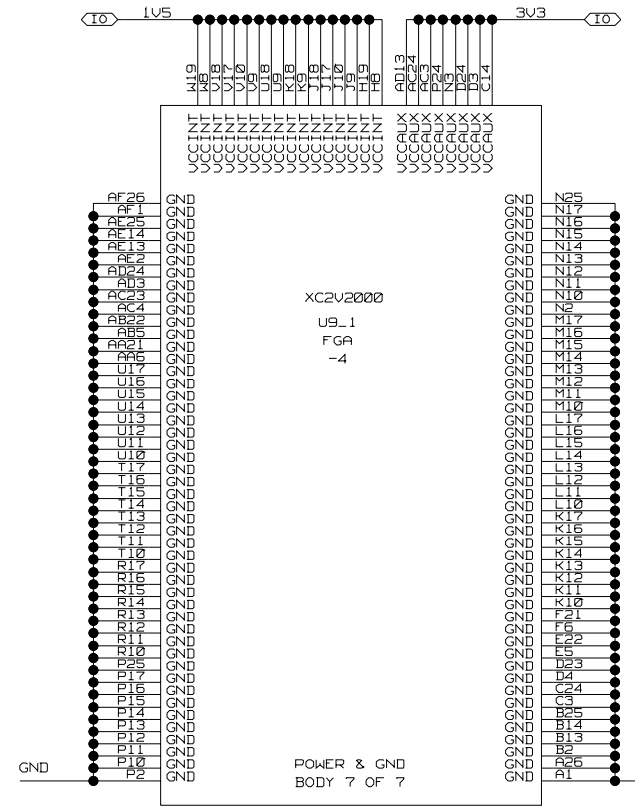

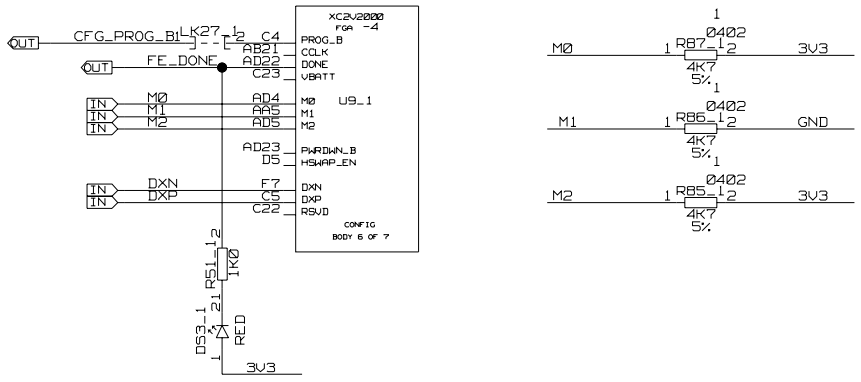

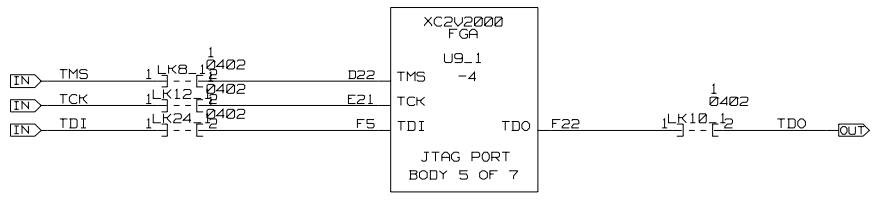

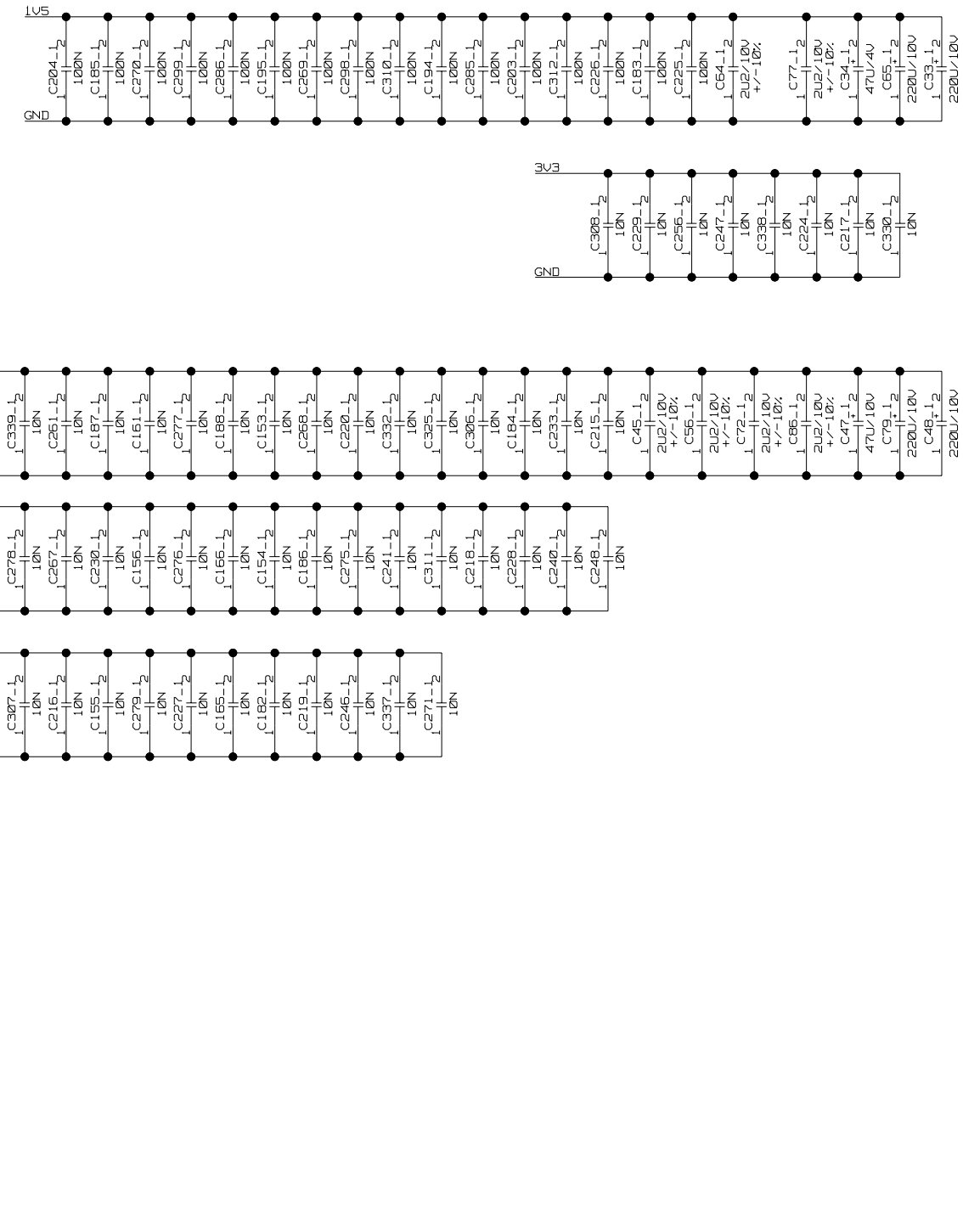

C	01-06-05	TE270	D. J. BALLARD	I. CHURCH	J. COUGHLAN	
B	11-06-04	TE243	S. TAGHAVI	J. COUGHLAN	J. COUGHLAN	
A	13-11-02	-----	S. TAGHAVIRAD	S. TAGHAVIRAD	S. TAGHAVIRAD	
ISSUE	DATE	MOD NO.	DRN BY.	CHKD.	APPD.	STATUS

USED ON CMS

© CCLRC 2002

CCLRC
COUNCIL FOR THE CENTRAL LABORATORY OF THE RESEARCH COUNCILS
RUTHERFORD APPLETON LABORATORY, CHILTON, OXON OX11 0QX.

TITLE PC3205M CIRCUIT

CMS TRACKER FED

FRONT END FPGA

A 2-TE-0070-020<21>C

TOTAL NO. OF SHEETS 95

A 2-TE-0070-020<21>C