A 1-TE-0070-022-03-B

PROJECTION

THIS DRAWING CONFORMS TO B.S. 308

BOARD VIEWED ON 'A' FACE

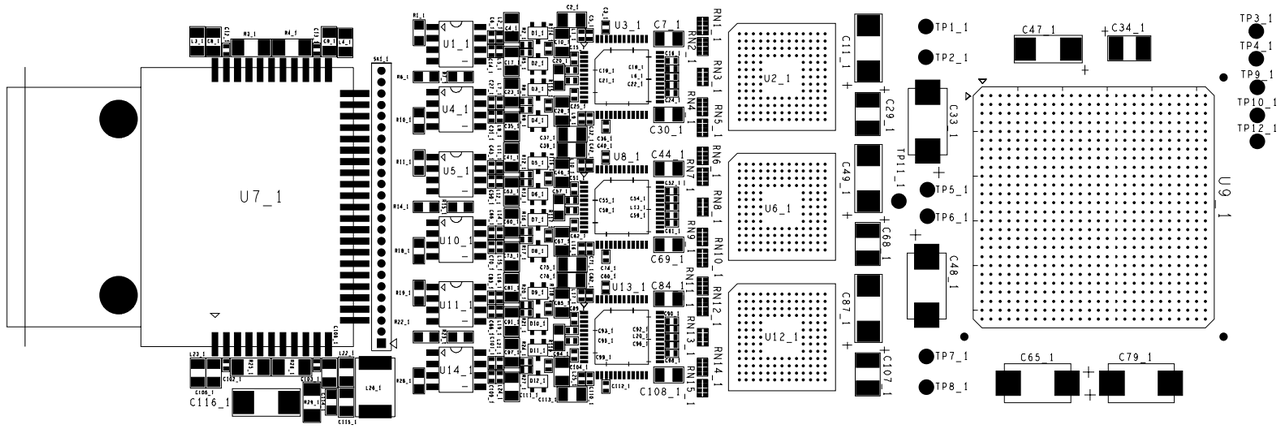

1 CHANNEL (COMPONENTS: TOP AND BOTTOM) REPEATED 8 TIMES

SEE NOTE 1 FOR MORE INFORMATION ON COMPONENTS

TOP ASSEMBLY NOTES

SOLDER PASTE MASTERS AVAILABLE ,FOR ASSEMBLY OF SURFACE MOUNT COMPONENTS.
TOP SOLDER PASTE - PC3205M/2 S FACE
BOTTOM SOLDER PASTE - PC3205M/2 T FACE
TOP ASSEMBLY DRG. AVAILABLE - A1-TE-0070-022-01-*

1. COMPONENTS ARE SHOWN (FOR CHANNEL 1) WITH REFERENCE DESIGNATORS ENDING IN '_1' FOR CHANNEL 2
   THEY END '_2' AND SO ON UP TO CHANNEL 8
   THE COMPONENT REFERENCE DESIGNATORS ARE IDENTICAL FOR EACH CHANNEL EXCEPT FOR
   '_*' SUFFIX. I.E. U1_1 IS IN THE SAME PLACE ON CHANNEL1 AS U1_2 IS ON CHANNEL 2
2. ENSURE CORRECT ORIENTATION OF COMPONENTS.
3. OBSERVE ELECTROSTATIC DISCHARGE PRECAUTIONS FOR COMPONENTS.
4. SEE DO NOT FIT LIST FOR COMPONENTS NOT TO ASSEMBLED.
5. FIX OPTO DEVICES (U7_1-8) TO BOARD WITH SCREWS BEFORE SOLDERING TO BOARD.

BOARD VIEWED ON 'N' FACE

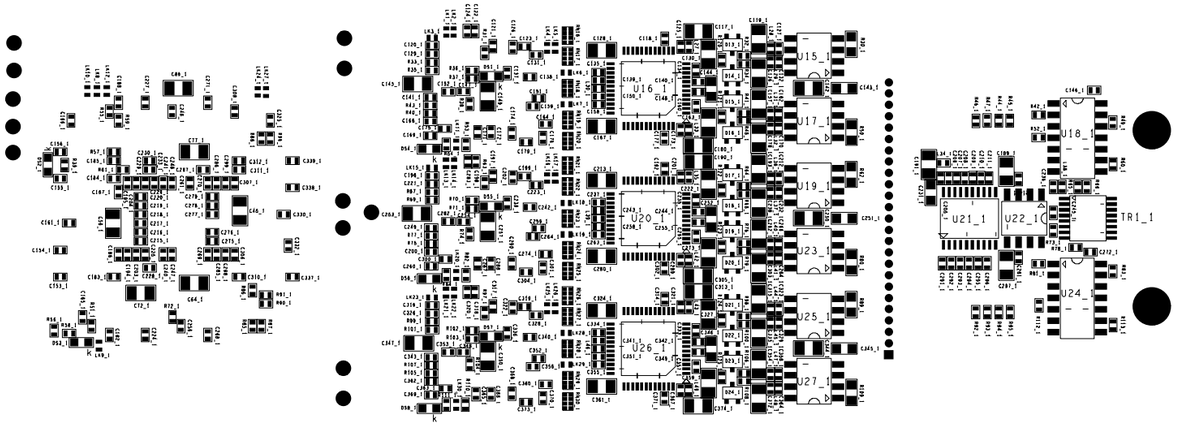

BOTTOM ASSEMBLY NOTES

SOLDER PASTE MASTERS AVAILABLE ,FOR ASSEMBLY OF SURFACE MOUNT COMPONENTS
TOP SOLDER PASTE - PC3205M/2 S FACE
BOTTOM SOLDER PASTE - PC3205M/2 T FACE
BOTTOM ASSEMBLY DRG. AVAILABLE - A1-TE-0070-022-02-*.

1. COMPONENTS ARE SHOWN (FOR CHANNEL 1) WITH REFERENCE DESIGNATORS ENDING IN '_1' FOR CHANNEL 2
   THEY END '_2' AND SO ON UP TO CHANNEL 8.
   THE COMPONENT REFERENCE DESIGNATORS ARE IDENTICAL FOR EACH CHANNEL EXCEPT FOR
   THE '_*' SUFFIX. I E U1_1 IS IN THE SAME PLACE ON CHANNEL1 AS U1_2 IS ON CHANNEL 2
2. ENSURE CORRECT ORIENTATION OF COMPONENTS.
3. OBSERVE ELECTROSTATIC DISCHARGE PRECAUTIONS FOR COMPONENTS.
4. SEE DO NOT FIT LIST FOR COMPONENTS NOT TO ASSEMBLED

ISSUE	DATE	MOD NO.	DRAWN	CHECKED	APPROVED	STATUS
B	11-06-04	TE243	D.J.BALLARD	C.P.DAY	J.COUGHLAN	
A	04-12-02	-----	C.P DAY	D.J.BECKETT	S.TAGHAVIRAD	

TOLERANCE UNLESS STATED

FINISH: REMOVE ANY BURRS

ORIGINAL SCALE 3:1

DO NOT SCALE

MATERIAL & SPEC

SURFACE TEXTURE micro m ✓ UNLESS STATED

0 — 16.6 mm

USED ON

© CCLRC 2003

CCLRC
COUNCIL FOR THE CENTRAL LABORATORY OF THE RESEARCH COUNCILS.
RUTHERFORD APPLETON LABORATORY, CHILTON, OXON, OX11 0QX

TITLE PC3205M CHANNEL ASSEMBLY
CMS TRACKER FED

A 1-TE-0070-022-03-B

TOTAL NO. OF SHEETS 3

A 1-TE-0070-022-03-B