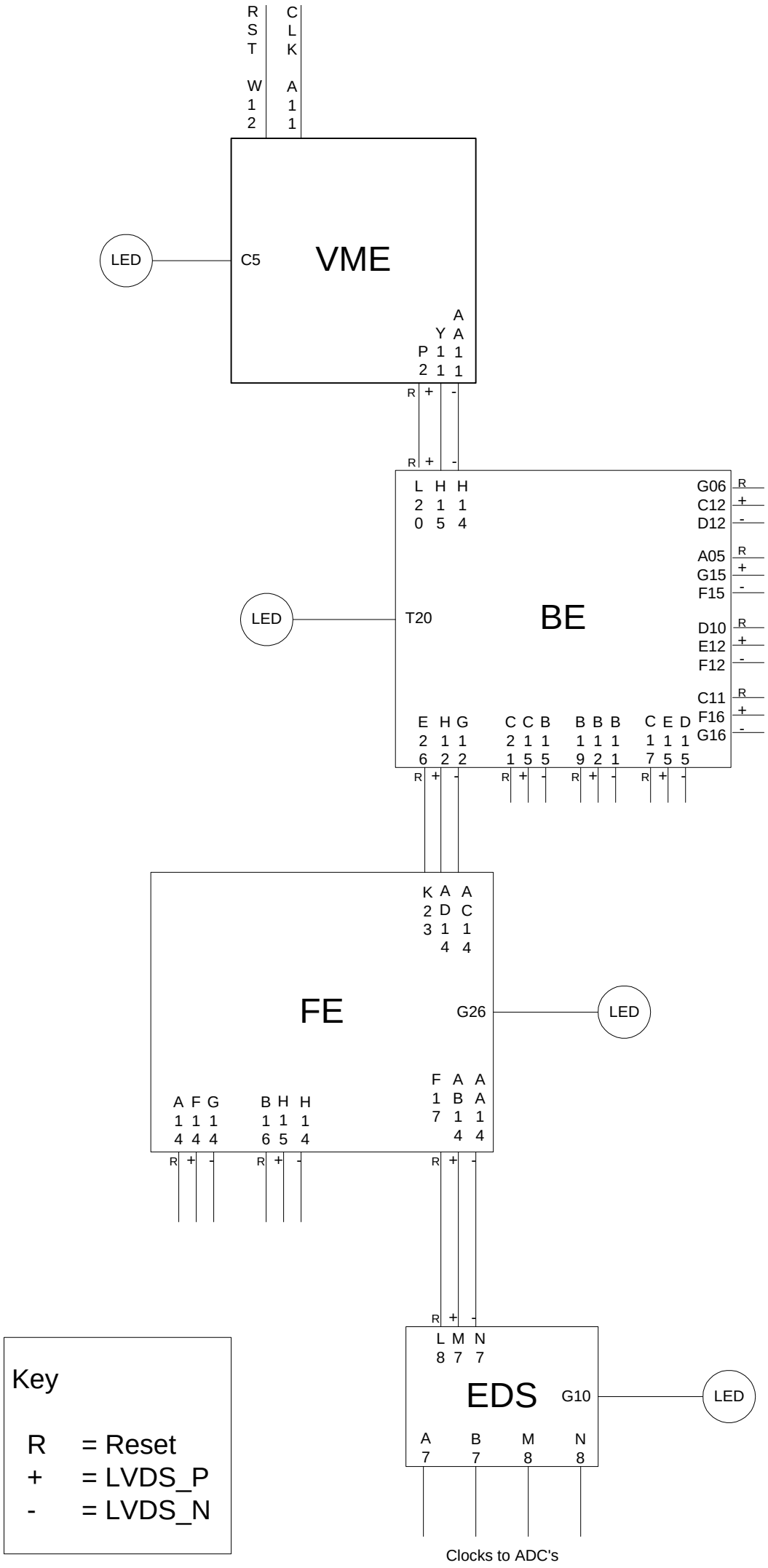
RST W12
CLK A11
LED
C5
VME
P2 Y11 AA11
R + -
R + -
L20 H15 H14
LED
T20
BE
G06 C12 D12
A05 G15 F15
D10 E12 F12
C11 F16 G16
E26 H12 G12
C21 C15 B15
B19 B12 B11
C17 E15 D15
K23 AD14 AC14
FE
G26
LED
A14 F14 G14
B16 H15 H14
F17 AB14 AA14
L8 M7 N7
EDS
G10
LED
A7 B7 M8 N8
Clocks to ADC's
Key
R = Reset
+ = LVDS_P
- = LVDS_N